TUBE TOP TABLE

DESCRIPTION
A minimalist statement in form and proportion, Tube Top combines a transparent formed acrylic base to support its elegant mesh fabric shade in tension, steering away from conventional modes of construction. Its lightweight shade appears to float freely, gently tethered by its fabric cable. Tube Top is available in multiple table, floor and pendant models.

FIXTURE TYPE
Table

LIGHT SOURCE
TT 14
Brand: SATCO
(1) E26 base 5.5W (60W replacement)
3000K G16 LED bulb: 500 lumens

TT 21,27
Brand: SATCO
(1) E26 base 8W (60W replacement)
2700K BT-15 LED bulb: 800 lumens

LIGHT CONTROL
Full range dim (In-line rotary dimmer)

FEATURES
Multiple sizes for a variety of applications

SPECIFICATIONS
Voltage: 120V
Cable length: 6' (182cm)

CERTIFICATIONS

PRODUCT CODES

Tube Top 14 (Silver/Clear):	TUBE 14 GRY/CLR
Tube Top 14 (White/Clear):	TUBE 14 WHT/CLR
Tube Top 14 (White/Char):	TUBE 14 WHT/CHR
Tube Top 14 (Charcoal/Charcoal):	TUBE 14 CHR/CHR
Tube Top 21 (Silver/Clear):	TUBE 21 GRY/CLR
Tube Top 21 (White/Clear):	TUBE 21 WHT/CLR
Tube Top 21 (White/Char):	TUBE 21 WHT/CHR
Tube Top 21 (Charcoal/Charcoal):	TUBE 21 CHR/CHR
Tube Top 27 (Silver/Clear):	TUBE 27 GRY/CLR
Tube Top 27 (White/Clear):	TUBE 27 WHT/CLR
Tube Top 27 (White/Char):	TUBE 27 WHT/CHR
Tube Top 27 (Charcoal/Charcoal):	TUBE 27 CHR/CHR

PACKAGING WEIGHT AND DIMENSIONS

TT 14:	3.55LBS	16'' X 11'' X 5.5''
	1.6KGS	41cm X 28cm X 14cm
TT 21:	9.45LBS	23'' X 16'' X 8''
	4.3KGS	58cm X 41cm X 20cm
TT 27:	18.6LBS	29'' X 21'' X 12.5''
	8.4KGS	74cm X 53cm X 32cm

NOTES
Custom requests can be considered on volume orders

FINISHES

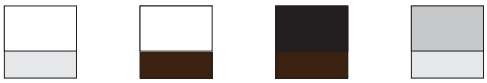

DIMENSIONS

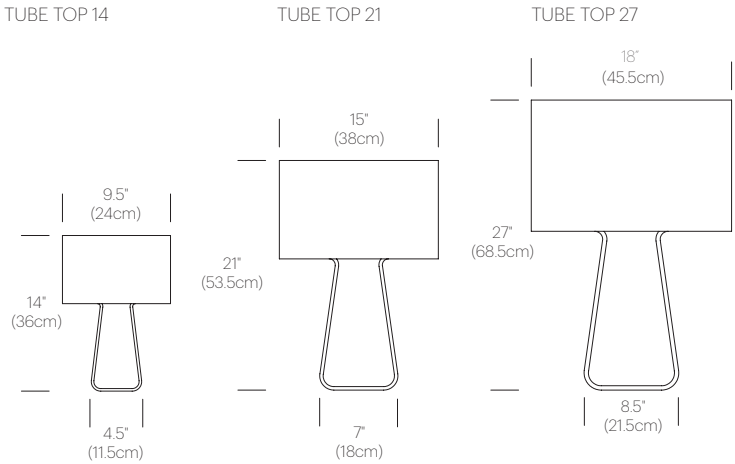

Pablo

TUBE TOP COLORS

DESCRIPTION

A minimalist statement in form and proportion, Tube Top combines a transparent formed acrylic base to support its elegant mesh fabric shade in tension, steering away from conventional modes of construction. Its lightweight shade appears to float freely, gently tethered by its fabric cable.

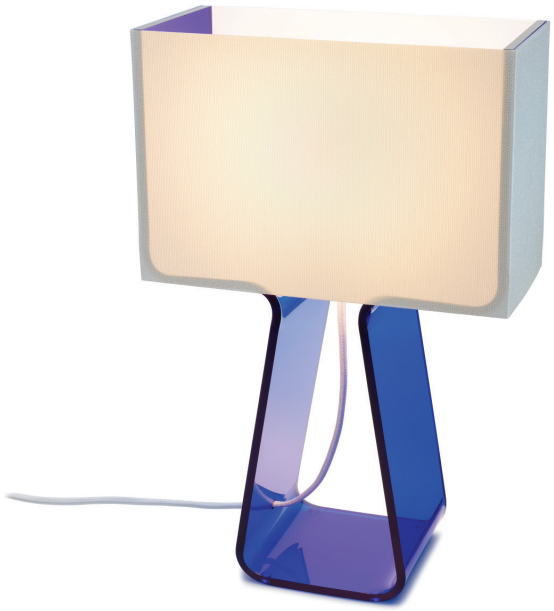

FIXTURE TYPE

Table

LIGHT SOURCE

TT 14
Brand: SATCO
(1) E26 base 5.5W (60W replacement)
3000K G16 LED bulb: 500 lumens

LIGHT CONTROL

Full range dim (In-line rotary dimmer)

FEATURES

Full-range dimmer

SPECIFICATIONS

Voltage: 120V
Cable length: 6′ (182cm)

CERTIFICATIONS

FINISHES

WHITE/ GREEN
WHITE/ HOT PINK
WHITE/ YELLOW
WHITE/ SKY BLUE
WHITE/ COBALT
WHITE/ RUBY RED

DIMENSIONS

TUBE TOP COLOR

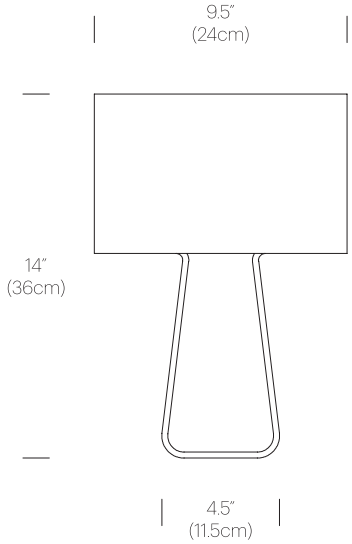

PRODUCT CODES

Tube Top (Yellow):	TUBE 14 YEL
Tube Top (Bright Green):	TUBE 14 GRN
Tube Top (Ruby Red):	TUBE 14 RED
Tube Top (Hot Pink):	TUBE 14 PIN
Tube Top (Sky Blue):	TUBE 14 SKY
Tube Top (Cobalt Blue):	TUBE 14 BLU

PACKAGING WEIGHT AND DIMENSIONS

TT 14:	3.55LBS	16″ X 11″ X 5.5″
	1.6KGS	41cm X 28cm X 14cm

NOTES

Custom requests can be considered on volume orders

Pablo