Totem Mini Pendant Up/Down
Installation Guide

Pablo

CAUTION - We recommend this fixture be installed by a licensed Electrician.

Before assembling and installing this product, carefully read the following:

- When installing multiple lamps; these fixtures must be wired in parallel in order to achieve the best possible light quality from each lamp. Wiring in series will result in the progressive loss of performance as the lamps move further away from the building power.
- Switch off power to the junction box before installing the lamp.
- Move light switch into the OFF position.
- When mounting to the ceiling, always use appropriate anchoring hardware.
- We recommend reading the guide before you begin installation.
- Installation Guides can be downloaded from Pablodesigns.com in the case this document is lost or damaged.
- Do not dissassemble, modify or try to repair this fixture! In order to recieve technical assistance contact Pablo Designs. Any modification to the fixture will nulify the manufacturer's warranty.

IMPORTANT INFORMATION ABOUT MATERIALS/FINISHES:

- Glass is a material which is fragile and can be easily damaged when mishandled.
- Some of the characteristics of mouth blown glass are small imperfections like; air bubbles, thickness variations, or scratches can occur during the production process. These imperfections underline the craftsmanship, the exclusivity and authenticity of hand blown Opal glass.

CLEANING INSTRUCTIONS:

- Use only a soft cloth to clean this fixutre, dampened with water or mild cleanser if required, DO NOT use alcohol, solvents, or other abraisive cleaners, as this could damage the lamp finish.

TECHNICAL SPECIFICATIONS

High Output LED Array
Hand-blown glass shades
18 Watt
2700-2200K DTW
1800 Lumens (1400down/400up)
US DRIVER: DA20W24VSM1-0000
EU DRIVER: DS20W024VSM1UD-0000

Contents

TOTEM MINI SHIPS IN MULTIPLE BOXES IN ORDER TO ENSURE THE SAFETY OF ALL COMPONENTS.

A. CANOPY BRACKET (DRIVER ATTACHED)
B. CANOPY COVER
C. LED MODULE SUBASSEMBLY
D. PARTS KIT
E. TOTEM MINI E SHADE
F. TOTEM MINI E SHADE

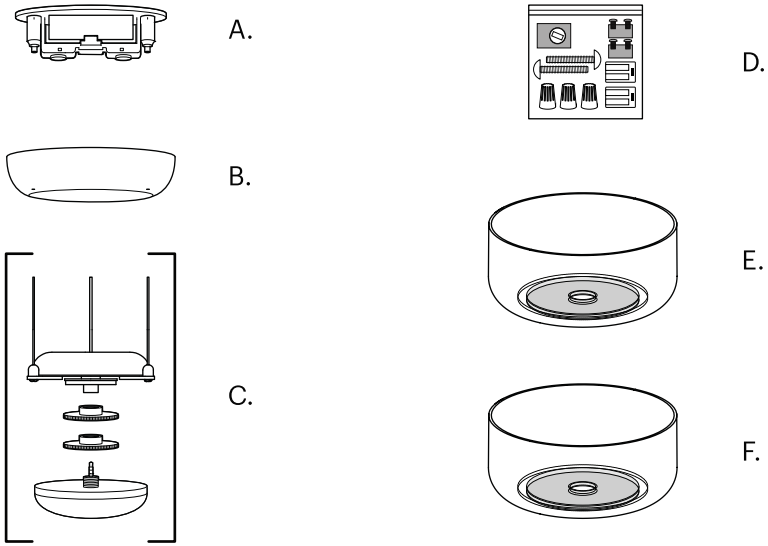

IF THERE ARE MISSING OR DAMAGED PARTS, PLEASE CONTACT US AS SOON AS POSSIBLE TO FILE A REPORT. CLEAR PHOTOS AND DESCRIPTIONS WILL ENABLE OUR CUSTOMER SERVICE TEAM TO QUICKLY AND EFFECTIVELY ADDRESS YOUR CLAIM.

(415) 865-5000
888 MARIN STREET
SAN FRANCISCO, CA 94124
INFO@PABLODESIGNS.COM
[**INFO@PABLODESIGNS.EU**]

Totem Mini Pendant UP/DOWN
Installation Guide

Pablo®

1 Mount CANOPY BRACKET to junction box (or ceiling structure using appropriate hardware).

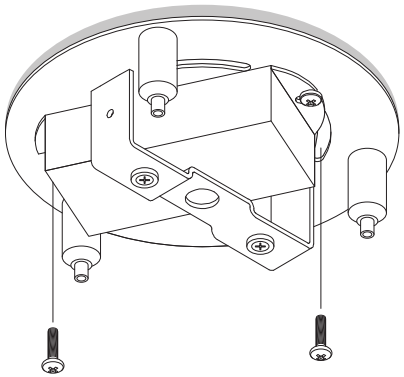

2 Dissassemble LED MODULE assembly (**4 PARTS TOTAL**).

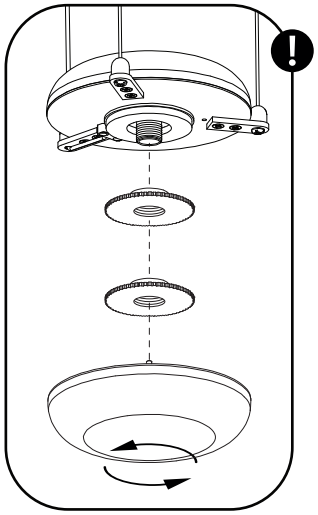

3 Fasten UPLIGHT MODULE to UP SHADE using THREADED COUPLER (G).

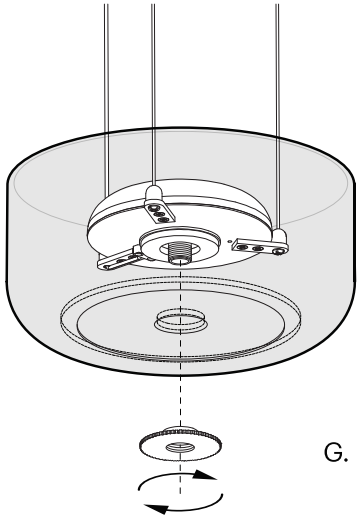

4 Secure DOWN SHADE to UPLIGHT ASSEMBLY using THREADED COUPLER (I).

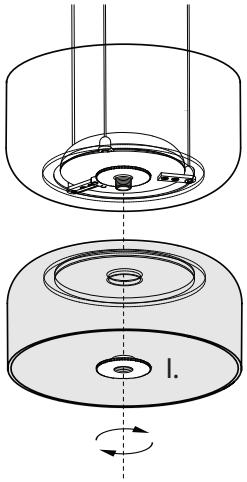

5 Thread DOWNLIGHT MODULE onto LAMP ASSEMBLY.

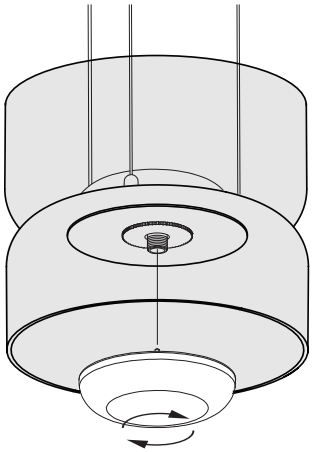

6 Feed cords through CANOPY and up into (3) CABLE GRIPPERS.

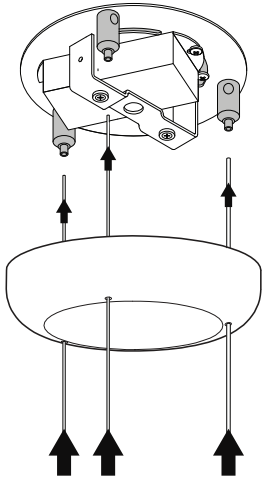

FOR THE POWER CABLE
Unthread one CABLE GRIPPER from its housing. Feed POWER CABLE through gripper and housing. **(NOTE! POWER CABLE SHOULD NOT BE TRIMMED UNTIL THIS STEP IS COMPLETE)**

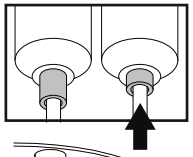

PRESS UPWARD TO RELEASE LOCKING MECHANISM.

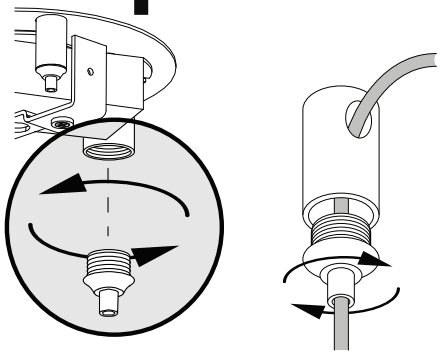

Feed the remaining 2 SUSPENSION CABLES through the CABLE GRIPPERS. **(optional! auxiliary strain relief can be added to cables at this point for added support these parts are included with lamp module packaging. Style a. for non power cables and style b. for power cable).**

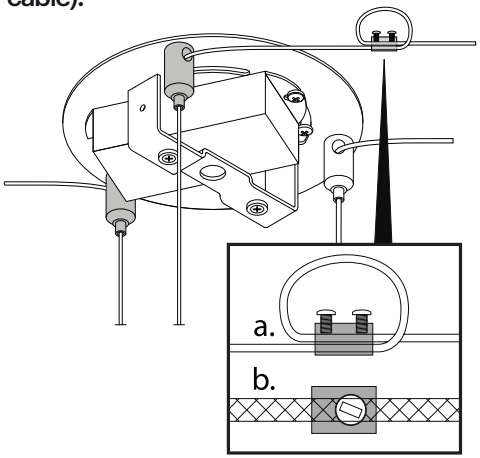

Totem Mini Pendant UP/DOWN
Installation Guide

Pablo

7 Adjust CABLES until lamp appears level in all directions. Trim excess cable, ensure to leave slack for minor adjustments.

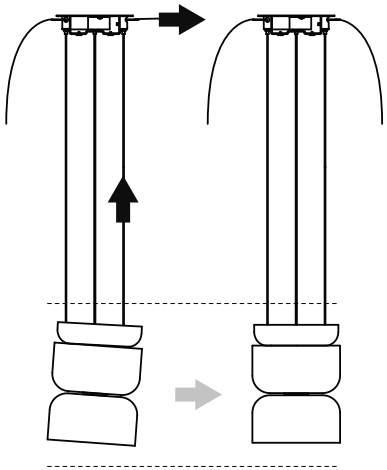

8 Unsheathe the coaxial POWER CABLE and separate INNER and OUTER conductors.

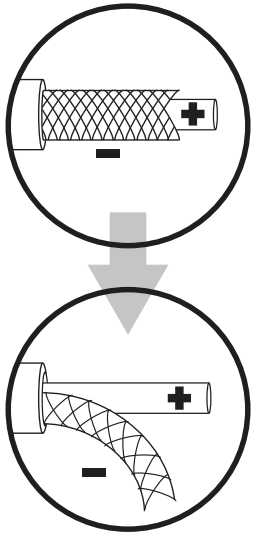

9 Wire DRIVER to BUILDING:

[BLACK TO BLACK - LINE]
[WHITE TO WHITE - NEUTRAL]

Secure DRIVER to CANOPY BRACKET using included VHB TAPE

Wire FIXTURE to DRIVER:

[WHITE (INNER) TO RED - POSITIVE]
[SILVER (OUTER) TO BLUE - NEGATIVE]

Your driver may contain Purple(+) and Pink(-) wires which are intended for use in 0-10V dimming installations only/otherwise please isolate wires.

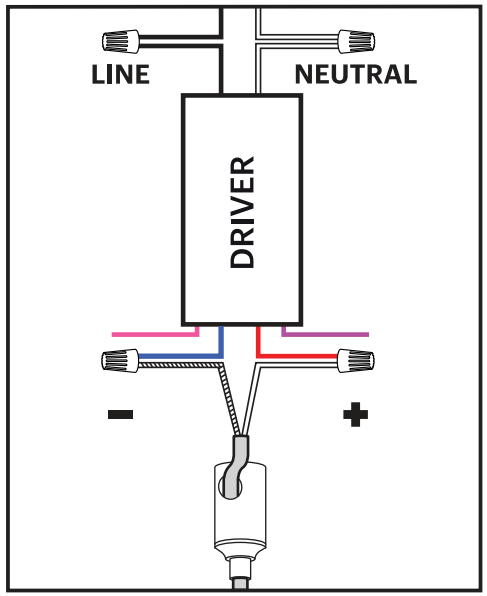

WIRING DIAGRAM

10 Test lamp to ensure all connections are properly made.

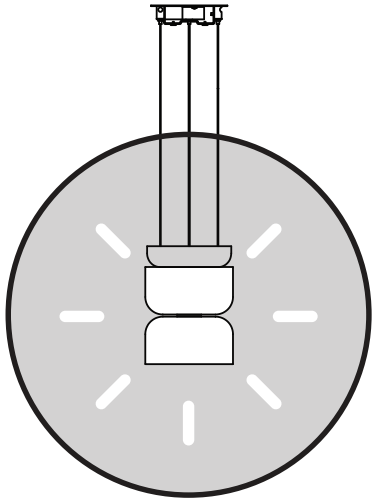

11 Secure CANOPY COVER to MOUNT BRACKET by magnetic connection to complete Installation.

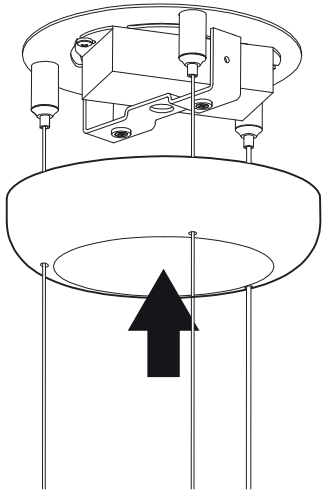

Totem Mini Pendant Downlight
Installation Guide

Pablo

CAUTION - We recommend this fixture be installed by a licensed Electrician.

Before assembling and installing this product, carefully read the following:

- When installing multiple lamps; these fixtures must be wired in parallel in order to achieve the best possible light quality from each lamp. Wiring in series will result in the progressive loss of performance as the lamps move further away from the building power.
- Switch off power to the junction box before installing the lamp.
- Move light switch into the OFF position.
- When mounting to the ceiling, always use appropriate anchoring hardware.
- We recommend reading the guide before you begin installation.
- Installation Guides can be downloaded from Pablodesigns.com in the case this document is lost or damaged.
- Do not dissassemble, modify or try to repair this fixture! In order to recieve technical assistance contact Pablo Designs. Any modification to the fixture will nulify the manufacturer's warranty.

IMPORTANT INFORMATION ABOUT MATERIALS/FINISHES:

- Glass is a material which is fragile and can be easily damaged when mishandled.
- Some of the characteristics of mouth blown glass are small imperfections like; air bubbles, thickness variations, or scratches can occur during the production process. These imperfections underline the craftsmanship, the exclusivity and authenticity of hand blown Opal glass.

CLEANING INSTRUCTIONS:

- Use only a soft cloth to clean this fixutre, dampened with water or mild cleanser if required, DO NOT use alcohol, solvents, or other abraisive cleaners, as this could damage the lamp finish.

TECHNICAL SPECIFICATIONS

High Output LED Array
Hand-blown opal glass shades
14 Watt
2700-2200K DTW
1400 Lumens
US DRIVER: DA20W24VSM1-0000
EU DRIVER: DS20W024VSM1UD-0000

Contents

TOTEM MINI SHIPS IN MULTIPLE BOXES IN ORDER TO ENSURE THE SAFETY OF ALL COMPONENTS.

A. CANOPY BRACKET (DRIVER ATTACHED)
B. CANOPY COVER
C. LED MODULE SUBASSEMBLY

PARTS A,B,C SHIP WITH SUSPENSION CABLES PRE INSTALLED.

D. PARTS KIT
E. TOTEM MINI E SHADE

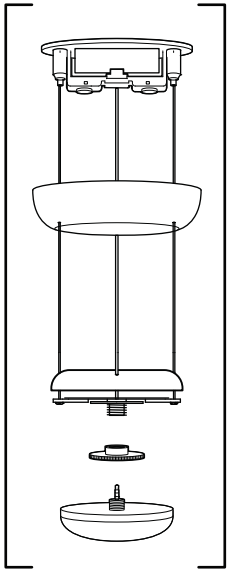

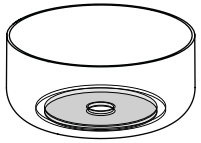

IF THERE ARE MISSING OR DAMAGED PARTS, PLEASE CONTACT US AS SOON AS POSSIBLE TO FILE A REPORT. CLEAR PHOTOS AND DESCRIPTIONS WILL ENABLE OUR CUSTOMER SERVICE TEAM TO QUICKLY AND EFFECTIVELY ADDRESS YOUR CLAIM.

(415) 865-5000
888 MARIN STREET
SAN FRANCISCO, CA 94124
INFO@PABLODESIGNS.COM
[**INFO@PABLODESIGNS.EU**]

Totem Mini Pendant Downlight
Installation Guide

Pablo®

1 Un-spool (3) SUSPENSION CABLES and extend the lamp assembly.

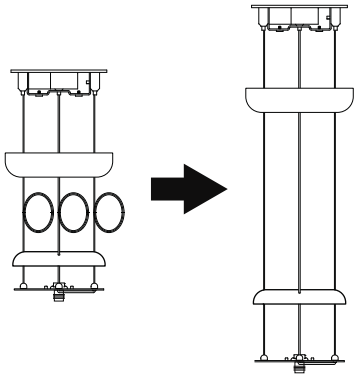

NOTE! ENSURE THE CABLES REMAIN IN A STRAIGHT PATH AND DO NOT BECOME CROSSED OR TANGLED.

2 Dissassemble LED MODULE assembly (**3 PARTS TOTAL**).

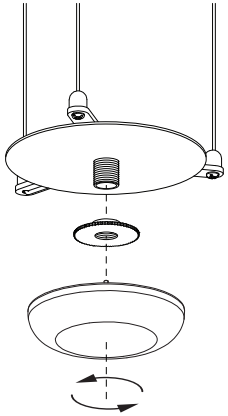

3 Secure the SHADE to the lamp suspension subassembly using the SHADE COUPLER.

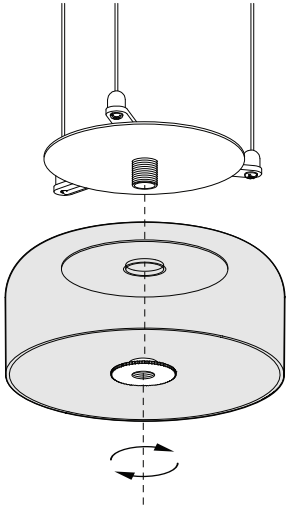

4 Thread DOWNLIGHT MODULE onto shade assembly.

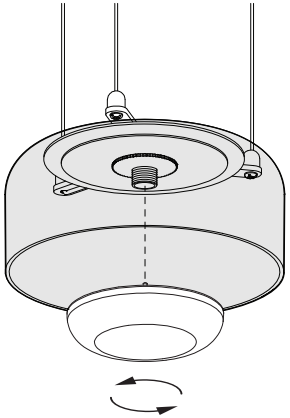

5 Mount CANOPY BRACKET to junction box (or ceiling structure using appropriate hardware).

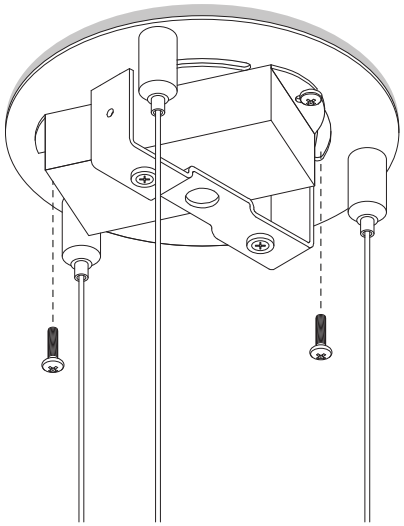

6 Set desired height. Adjust CABLES until lamp appears level in all directions. Trim excess cable, ensure to leave slack for minor adjustments.

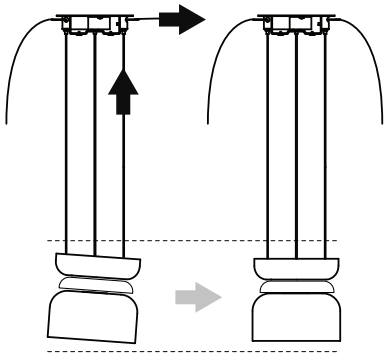

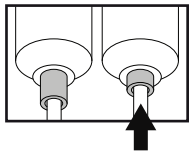

PRESS UPWARD TO RELEASE LOCKING MECHANISM.

OPTIONAL! Auxiliary strain relief can be added to cables at this point for added support these parts are included with the assembly. (Style a. for non power cables and style b. for power cable).

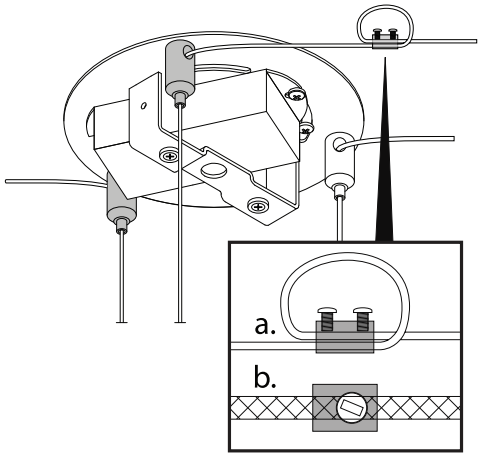

7 Unsheathe the coaxial POWER CABLE and separate INNER and OUTER conductors.

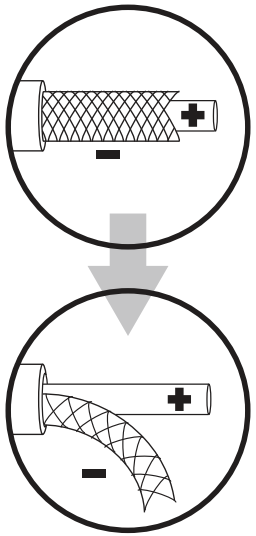

Totem Mini Pendant Downlight
Installation Guide

Pablo®

9 Wire DRIVER to BUILDING:
[BLACK TO BLACK - LINE]
[WHITE TO WHITE - NEUTRAL]

Secure DRIVER to CANOPY BRACKET using included VHB TAPE

Wire FIXTURE to DRIVER:
[WHITE (INNER) TO RED - POSITIVE]
[SILVER (OUTER) TO BLUE - NEGATIVE]

Purple(+) and Pink(-) wires are intended for use in 0-10V dimming installations only/otherwise please isolate wires.

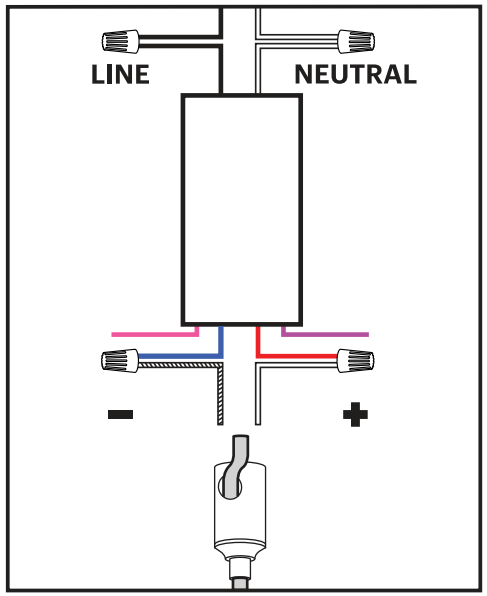

WIRING DIAGRAM

10 Test lamp to ensure all connections are properly made.

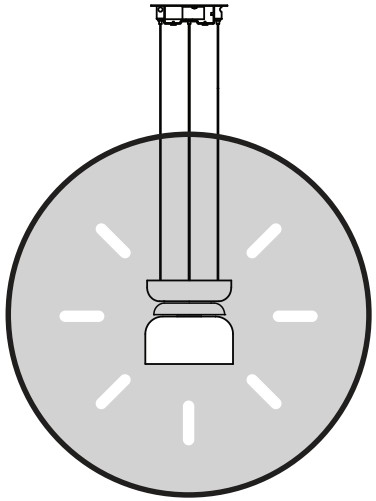
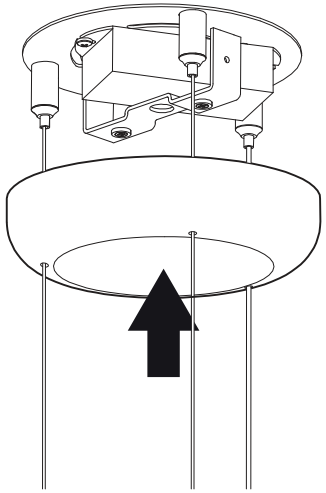
11 Secure CANOPY COVER to MOUNT BRACKET by magnetic connection to complete Installation.