CIRCA TABLE

DESCRIPTION
Circa's revolutionary flat-panel LED light source combines seamless movement with warm and balanced illumination. Through its integrated USB charging port, 45° shade tilt and 360° rotation, Circa redefines the ambient lighting category. Circa is available in a wide range of models to satisfy all residential, office and hospitality applications.

FIXTURE TYPE
Table

LIGHT SOURCE
LED Flat-Panel

LIGHT CONTROL
Full range dim control 100%-10% (optical switch)

FEATURES
360° shade rotation
45° shade tilt in two directions
USB-A charging port
Ships flat-packed

SPECIFICATIONS
Voltage: 120V or 240V 50-60Hz
Power Consumption: 8.7W
Color temperature: 2700K
Luminosity: 500 Lumens
Luminaire efficacy: 57 Lumens/Watt
Color Rendition Index: 90 CRI
ADA compliant
Title 20 compliant
50K hour lifespan
Cable length: 8' (244cm)
Global multi-plug adapter available

CERTIFICATIONS
Intertek CE

FINISHES
WHITE
GRAPHITE

DIMENSIONS

CIRCA TABLE

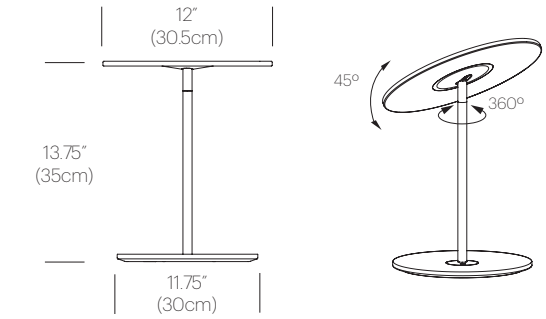

CIRCA GROMMMET

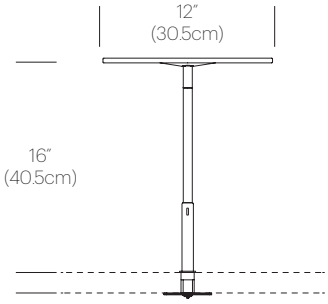

SURFACE MOUNT AVAILABLE FOR 1.18" (3cm), 2" (5cm) AND 3" (7.5cm) WORKSURFACES

PRODUCT CODES

Circa Table (Graphite):	CIRC TBL GPT
Circa Table (White):	CIRC TBL WHT
Circa Table Grommet (White):	CIRC-GROM-WHT
Circa Table Grommet (Graphite):	CIRC-GROM-GPT

PACKAGING WEIGHT AND DIMENSIONS

Circa Table :	8.45LBS	15'' X 14'' X 4''
	3.8KGS	38cm X 36cm X 10cm

NOTES
Custom requests can be considered on volume orders

AVAILABLE GLOBALLY