CIRCA FLUSH

DESCRIPTION
Circa's revolutionary flat-panel LED light source combines seamless movement with warm and balanced illumination. Circa is available in a wide range of models to satisfy all residential, office and hospitality applications.

FIXTURE TYPE
Wall/Ceiling

LIGHT SOURCE
LED Flat-Panel

LIGHT CONTROL
Hard wired, dimmable
Compatible with TRIAC and ELV dimmers
0-10V dimming available upon request
Dali compatability upon request

FEATURES
Ships flat-packed

SPECIFICATIONS
Voltage: 120 or 240V 50/60Hz
277V 50/60Hz available upon request
Power Consumption: 10.5W
Color temperature: 2700K
Luminosity: 12"(555Lm), 16"(740 Lm)
Luminaire efficacy: 53 Lumens/Watt (12),
70 Lumens/Watt (16)
Color Rendition Index: 90 CRI
Title 20 compliant
ADA compliant
50K hour lifespan

CERTIFICATIONS
Intertek

12" STOCK ITEM

16" STOCK ITEM

DIRECT

INDIRECT
SPECIAL ORDER ONLY

FINISHES

WHITE

GRAPHITE

DIMENSIONS

CIRCA FLUSH 12

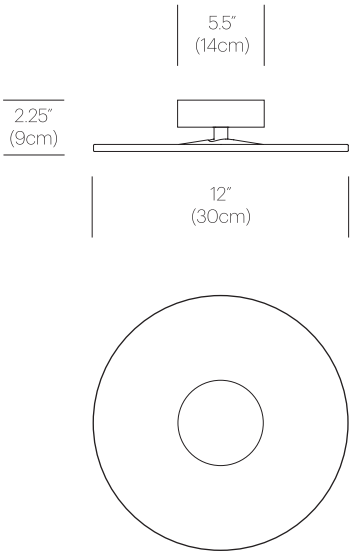

CIRCA FLUSH 16

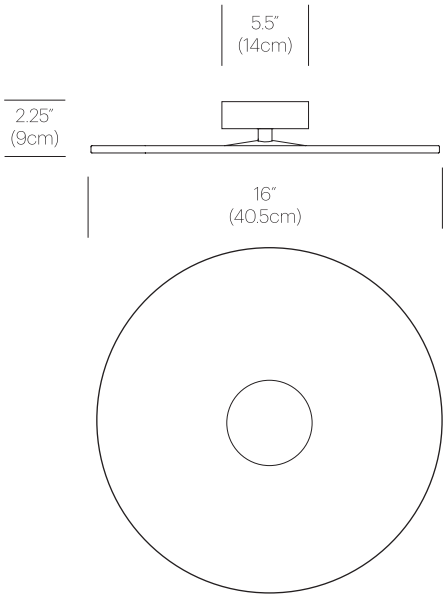

PRODUCT CODES

Circa Flush Direct 12 Graphite:	Special order only
Circa Flush Direct 12 White:	CIRC FSH 12 WHT
Circa Flush Direct 16 Graphite:	Special order only
Circa Flush Direct 16 White:	CIRC FSH 16 WHT
Circa Flush Indirect 12 Graphite:	Special order only
Circa Flush Indirect 12 White:	Special order only
Circa Flush Indirect 16 Graphite:	Special order only
Circa Flush Indirect 16 White:	Special order only

PACKAGING WEIGHT AND DIMENSIONS

Circa Flush 12:	5.75LBS	15'' X 14'' X 4''
	2.6KGS	38cm X 36cm X 10cm
Circa Flush 16 :	9.05LBS	18.5'' X 18'' X 4''
	4.1KGS	47cm X 46cm X 10cm

NOTES
Custom requests can be considered on volume orders

AVAILABLE GLOBALLY