Pablo®

BOLA DISC

120/240V ASSEMBLY & INSTALLATION INSTRUCTIONS

INFO@PABLODESIGNS.COM
888 MARIN STREET
SAN FRANCISCO, CA
94124

PABLODESIGNS.COM

Bola Pendant Collection
Installation Guide

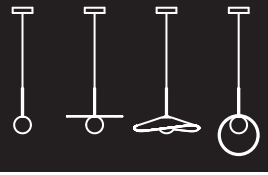

Pablo

CAUTION - WE RECOMMEND THIS FIXTURE BE INSTALLED BY A LICENSED ELECTRICIAN.

BEFORE ASSEMBLING AND INSTALLING THIS PRODUCT, CAREFULLY READ THE FOLLOWING:

- When installing multiple lamps; these fixtures must be wired in parallel in order to achieve the best possible light quality from each lamp. Wiring in series will result in the progressive loss of performance as the lamps move further away from the building power.
- Switch off power to the junction box before installing the lamp.
- Move light switch into the OFF position.
- When mounting to the ceiling, always use appropriate anchoring hardware.
- This lamp is for indoor use only, excluding bathrooms or any type of humid environment.
- We recommend reading the guide before you begin installation.
- Installation Guides can be downloaded from Pablodesigns.com in the case this document is lost or damaged.
- Do not dissassemble, modify or try to repair this fixture! In order to recieve technical assistance contact Pablo Designs. Any modification to the fixture will nulify the manufacturer's warranty.

IMPORTANT INFORMATION ABOUT MATERIALS/FINISHES:

- Glass is a material which is fragile and can be easily damaged when mishandled.
- One of the main characteristics of Opal glass is that it is hand blown. Small imperfections like; air bubbles, thickness variations, or scratches can occur during the production process. These imperfections underline the craftsmanship, the exclusivity and authenticity of hand blown Opal glass.
- The annodizing and PVD process can result in slight variations in color intensity, we do our best to batch like parts, but slight variations may still remain among part sets.

CLEANING INSTRUCTIONS:

- Use only a soft cloth to clean this fixutre, dampened with water or mild cleanser if required, DO NOT use alcohol, solvents, or other abraisive cleaners, as this could damage the lamp finish.

TECHNICAL SPECIFICATIONS

	POWER - LUMINOSITY - COLOR TEMP	DRIVER INPUT	DRIVER OUTPUT	DRIVER LOAD
BOLA 4,5 UNV. DTW (DISC 12,18, HALO 12)	6W - 290 lm - 2700-1800K DTW	120-277VAC, 0.06A 50/60Hz	300mA CC	10-20V, 40VDC LED, 6W MAX
BOLA 6 UNV. DTW (DISC 22, FELT 24, HALO 18)	12W - 800 lm - 2700-1800K DTW	120-277VAC, 0.12A 50/60Hz	350mA CC	15-34V, 42VDC LED, 12W MAX
BOLA 8,10,12,16 UNV. DTW (DISC 32, FELT 32,42,52, HALO 22)	20W - 1710 lm - 2700-1800K DTW	120-277VAC, 0.22A 50/60Hz	600mA CC	20-36V, LED, 22W MAX
BOLA 4,5 US. CCT (DISC 12,18, HALO 12)	6W - 290 lm - 3000K CCT	120-277VAC, 0.08A 50/60Hz	200mA CC	20-40V, 40VDC LED
BOLA 6 US. CCT (DISC 22, FELT 24, HALO 18)	12W - 800 lm - 3000K CCT	120-277VAC, 0.15A 50/60Hz	350mA CC	20-42V, 42VDC LED
BOLA 8,10,12,16 US. CCT (DISC 32, FELT 32,42,52, HALO 22)	20W - 1710 lm - 3000K CCT	120-277VAC, 0.2A 50/60Hz	500mA CC	20-42V, LED,

Contents

BOLA PENDANTS SHIP IN MULTIPLE BOXES IN ORDER TO ENSURE THE SAFETY OF ALL COMPONENTS.

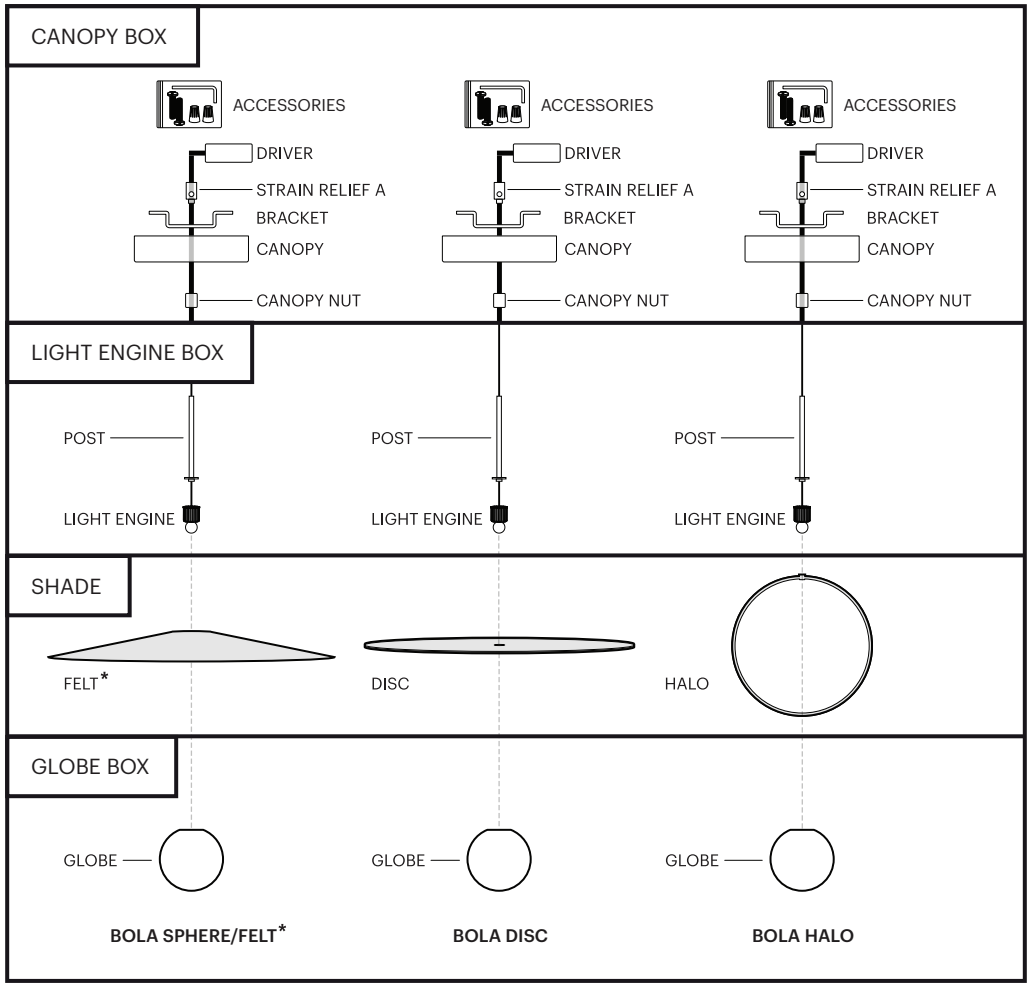

STEEL CABLE

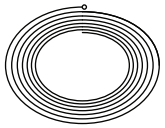

STRAIN RELIEF B

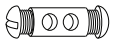

FOR BOLA DISC 32 AND BOLA FELT 32, 42, 52; A STEEL SUPPORT CABLE KIT WILL BE INCLUDED.

IF THERE ARE MISSING OR DAMAGED PARTS, PLEASE CONTACT US AS SOON AS POSSIBLE TO FILE A REPORT. CLEAR PHOTOS AND DESCRIPTIONS WILL ENABLE OUR CUSTOMER SERVICE TEAM TO QUICKLY AND EFFECTIVELY ADDRESS YOUR CLAIM.

(415) 865-5000
888 MARIN STREET
SAN FRANCISCO, CA 94124
INFO@PABLODESIGNS.COM
[**INFO@PABLODESIGNS.EU**]

Bola Pendant Collection
Installation Guide

Pablo

PAGE 2/4

1 Remove the contents of the canopy box and separate key items.

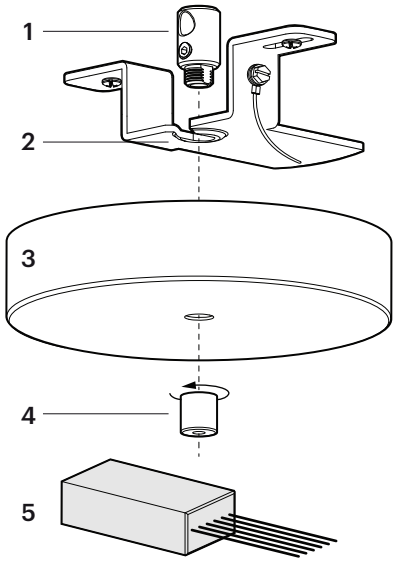

2 Peel protective later from VHB tape (included) and secure DRIVER to MOUNT BRACKET.

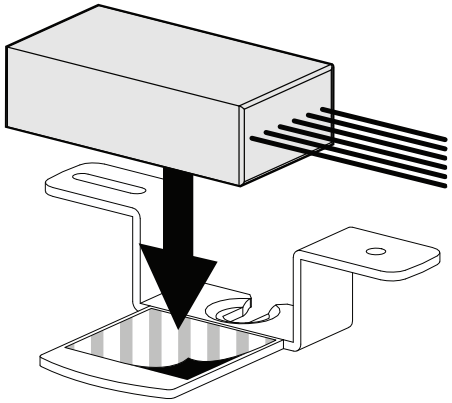

3 Secure MOUNT BRACKET to junction box using appropriate anchoring hardware (included).

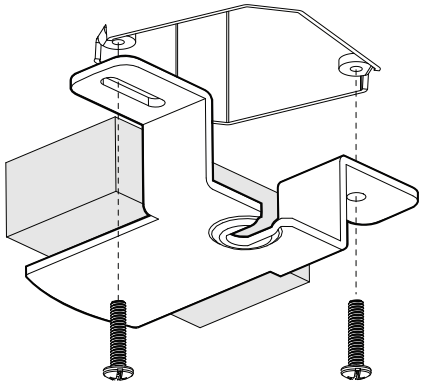

4 Weave power cord from LIGHT ENGINE through all necessary parts based on lamp model.

FIG. 01

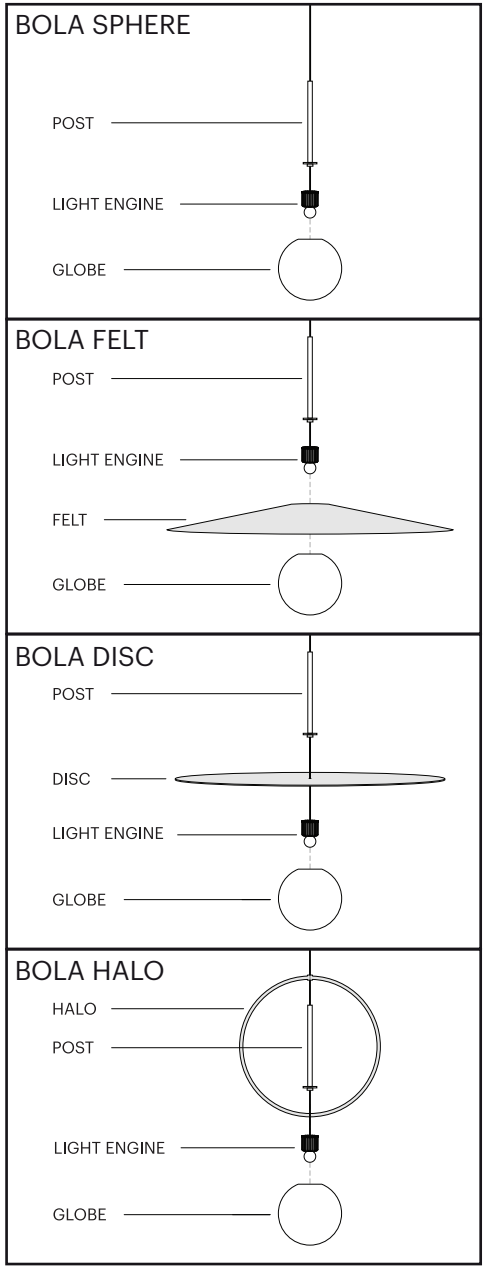

5 THIS STEP IS ONLY FOR BOLA DISC 32 OR BOLA FELT 32,42,52. FOR OTHER LAMP VARIANTS, MOVE ON TO STEP 6.

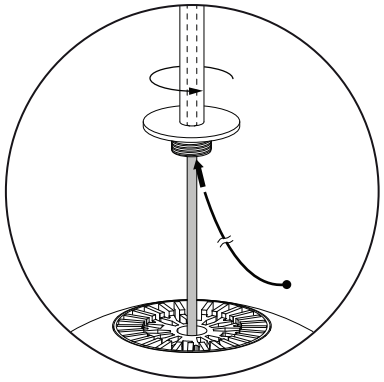

Feed Steel cable (included) through the POST until the crimped ball end bottoms out.

6 Thread POST onto LIGHT ENGINE. (NOTE! For Bola Disc; DISC will be trapped in between POST and LIGHT ENGINE. See FIG. 01).

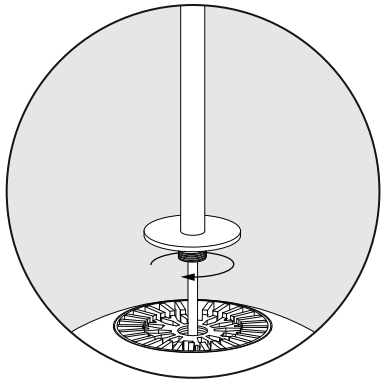

7 Unthread both set screws using included hex tool. Weave cables(s) through CANOPY NUT, CANOPY, AND STRAIN RELIEF.

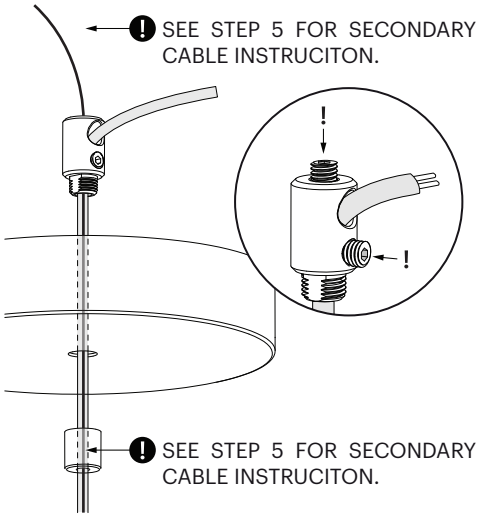

8 Set desired lamp height and secure STRAIN RELIEF A (NOTE: thread both set screws using included hex tool).

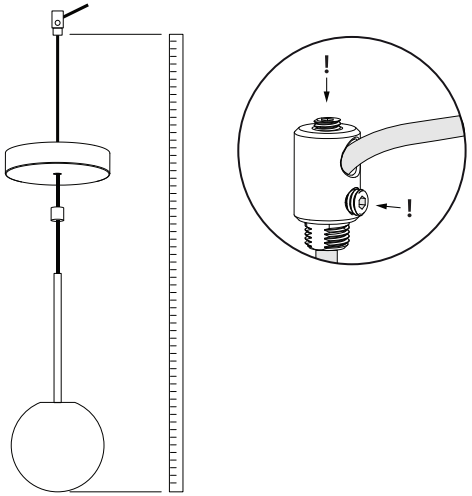

If employing SECONDARY CABLE, add included STRAIN RELIEF B now. Feed cable through both holes and tighten screws as demonstrated in Figure 02.

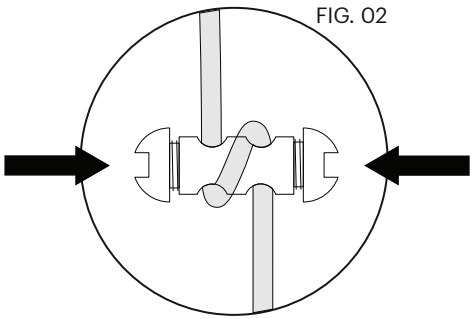

The location of STRAIN RELIEF B will determine the lamp's hang height.

Pull SECONDARY CABLE down through STRAIN RELIEF A until it stops.

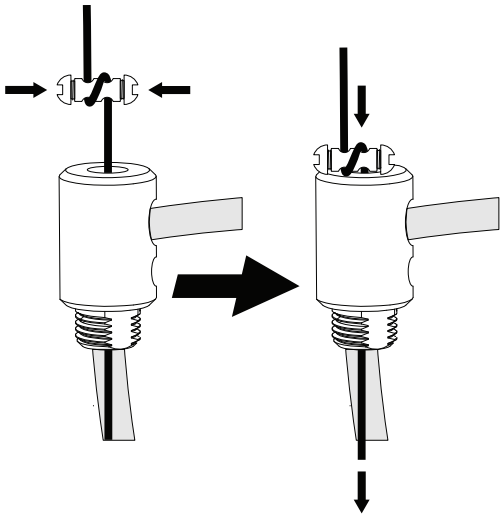

Place assembly onto the BRACKET and adjust the FABRIC POWER CABLE until desired appearance is reached.

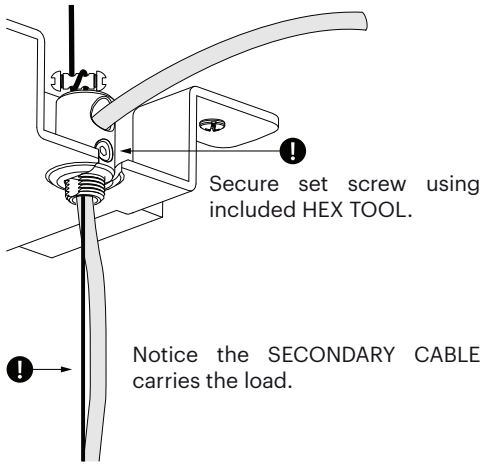

9 Set STRAIN RELIEF A onto MOUNT BRACKET ensuring parts nest properly (see Figure 03).

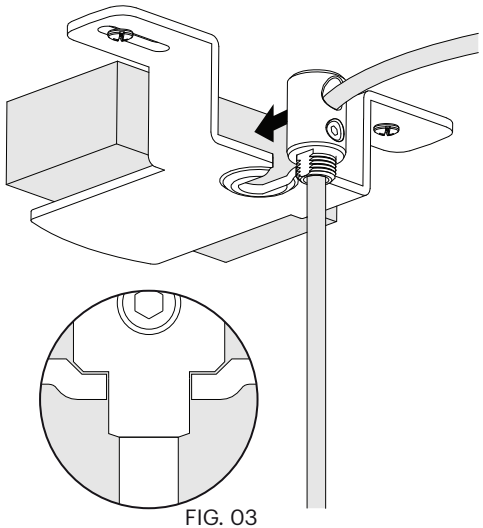

10 Trim excess cable(s). For the power cable, cut 6″ from STRAIN RELIEF A.

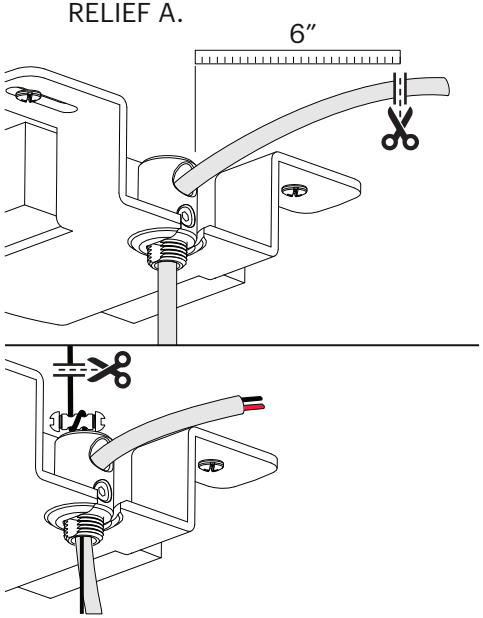

11 Wire DRIVER to BUILDING (black to black/white to white). Wire DRIVER to LAMP (black to blue/red to red). Pink(-) and purple(+) wires are intended for use in 0-10V dimming installations.

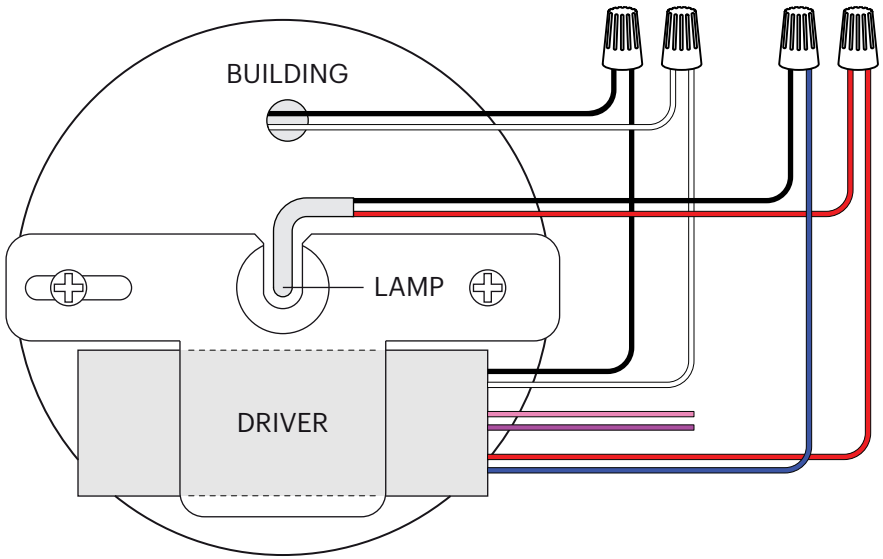

12 Once wiring is complete and lamp has been tested, secure CANOPY COVER with CANOPY NUT.

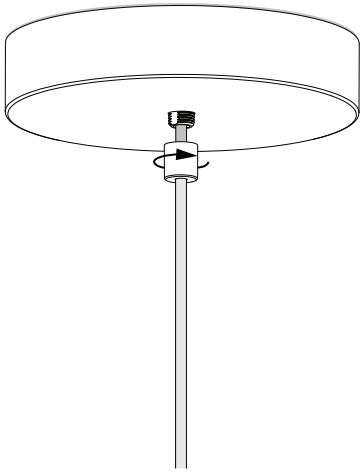

13 Carefully thread GLOBE DIFUSER onto the LIGHT ENGINE. (Note: the FELT SHADE must be placed onto lamp before adding the GLOBE DIFFUSER).

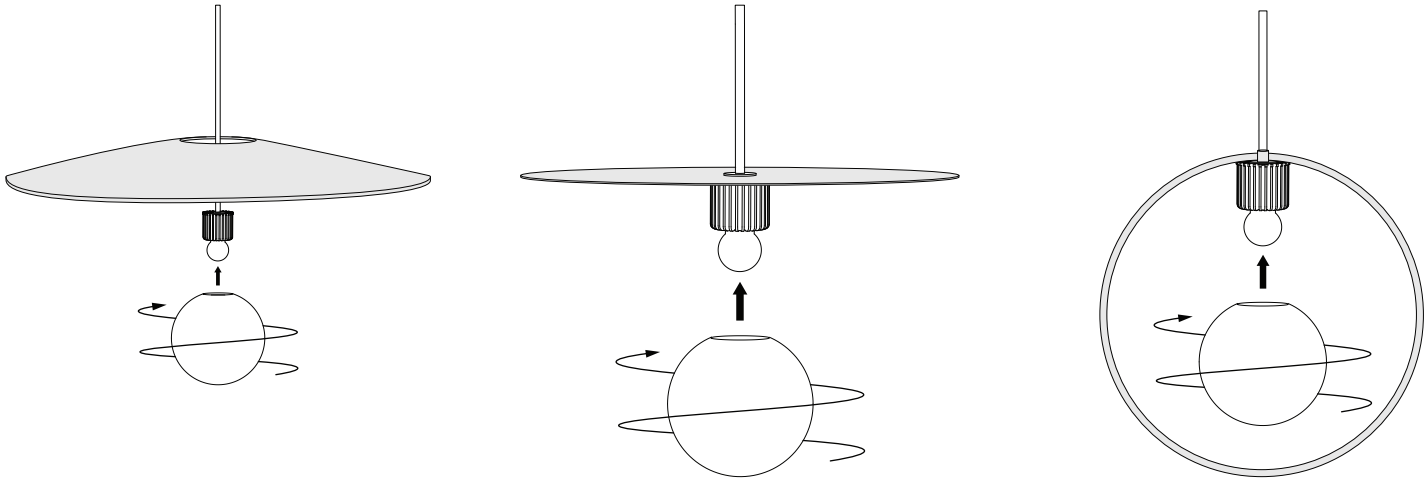

Pablo®

MULTI-LIGHT CANOPY

9″ and 12″

BOLA DISC/FELT PENDANT & CIELO XL PENDANT

ASSEMBLY & INSTALLATION INSTRUCTIONS

Intertek

MULTI-LIGHT CANOPY

1 LOCATE BUILDING POWER FEED/JUNCTION BOX
DETERMINE AND MARK SWAG LOCATIONS REFERENCING THE DIAGRAM AND PROVIDED CHART.
PROVIDED LAMP WIRES ARE 10', LAMP HANG HEIGHT REDUCES IN RELATION TO SWAG DISTANCE FROM CANOPY.

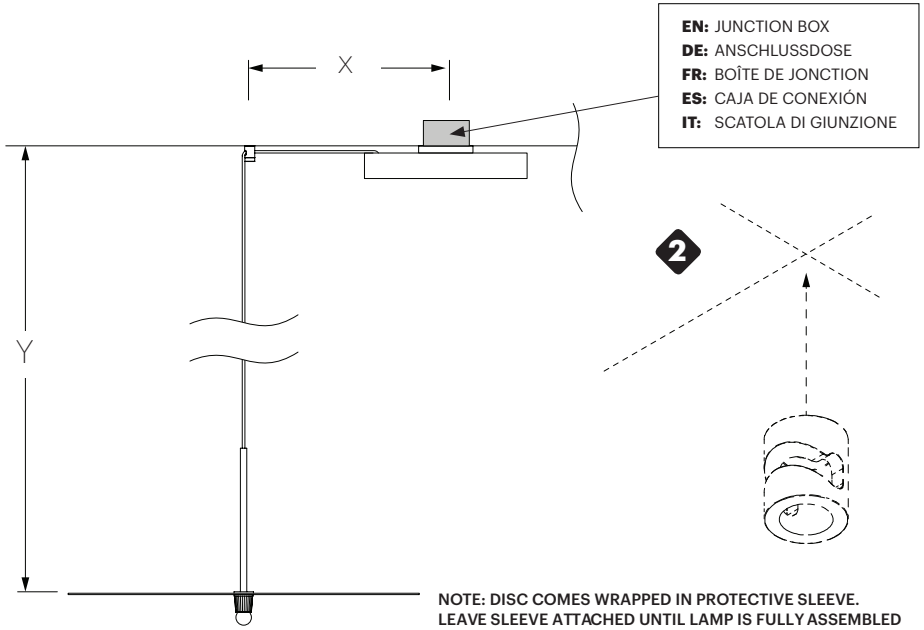

**NOTE: DISC COMES WRAPPED IN PROTECTIVE SLEEVE.
LEAVE SLEEVE ATTACHED UNTIL LAMP IS FULLY ASSEMBLED**

PROVIDED LAMP WIRES ARE 8', LAMP HANG HEIGHT REDUCES IN RELATION TO SWAG DISTANCE FROM CANOPY. IF X=5', Y CAN BE A MAXIMUM OF 3'.

SWAG SPACING CENTER TO CENTER	BOLA DISC 12	BOLA DISC 18	BOLA DISC 22	BOLA DISC 32
BOLA DISC 12	5″ 12.7 CM	8″ 20.3 CM	9″ 23 CM	13″ 33 CM
BOLA DISC 18	8″ 20.3 CM	8″ 20.3 CM	9″ 23 CM	13″ 33 CM
BOLA DISC 22	9″ 23 CM	9″ 23 CM	9″ 23 CM	13″ 33 CM
BOLA DISC 32	13″ 33 CM	13″ 33 CM	13″ 33 CM	13″ 33 CM

MULTI-LIGHT CANOPY

3 REMOVE CANOPY COVER, SET ASIDE

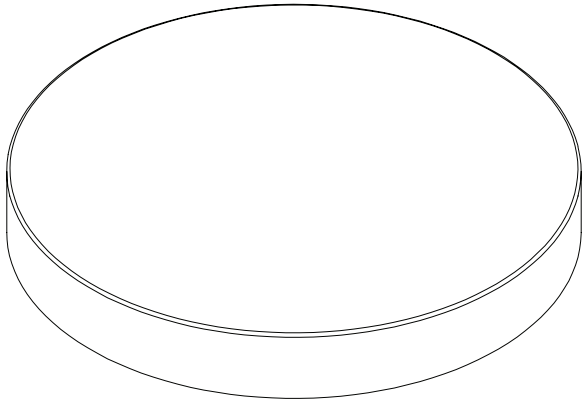

4 REMOVE DRIVER PLATE BY
REMOVING 3X FLAT HEAD SCREWS

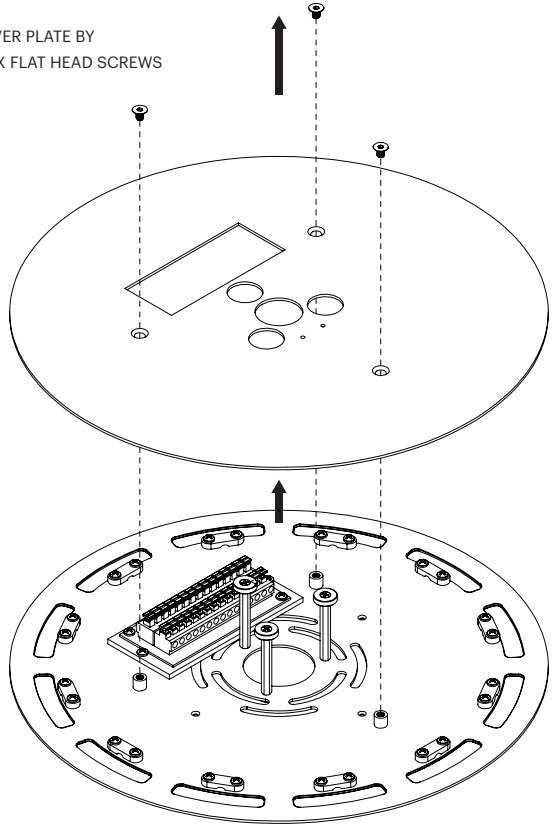

5 ROUTE BUILDING WIRING THROUGH MOUNTING PLATE.

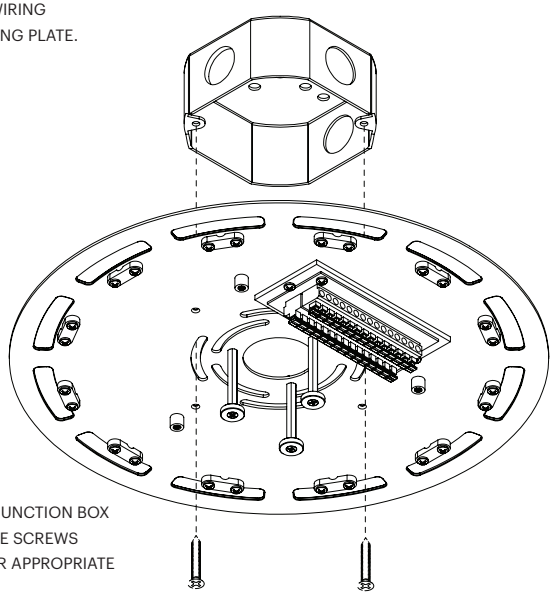

6 ATTACH PLATE TO JUNCTION BOX WITH 8-32 MACHINE SCREWS (NOT PROVIDED) OR APPROPRIATE ANCHORS.

7 WIRE BUILDING WIRING TO TERMINAL BLOCK.
US: BLACK TO BLACK AND WHITE TO WHITE **EU:** BLUE TO WHITE BROWN TO BLACK.

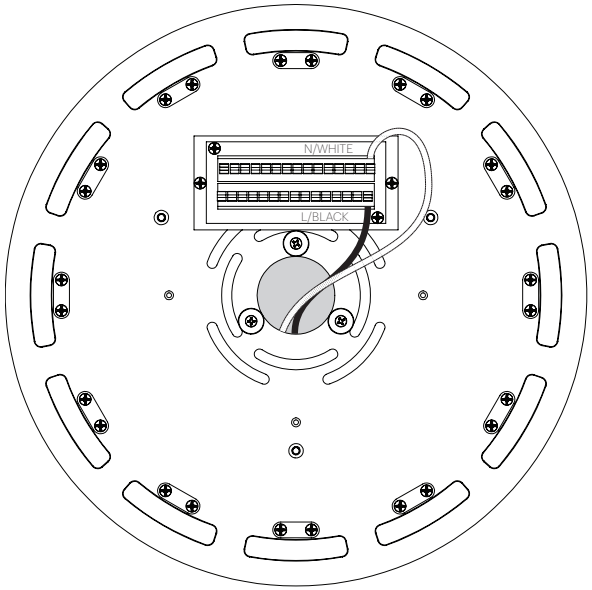

Pablo®
MULTI-LIGHT CANOPY

8 REMOVE THREADED SWAG CAP

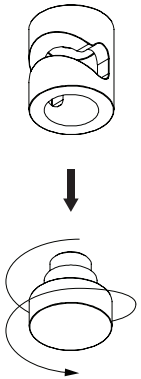

9 MOUNT SWAG USING APPROPRIATE FASTENER AND ANCHOR IN MARKED LOCATION

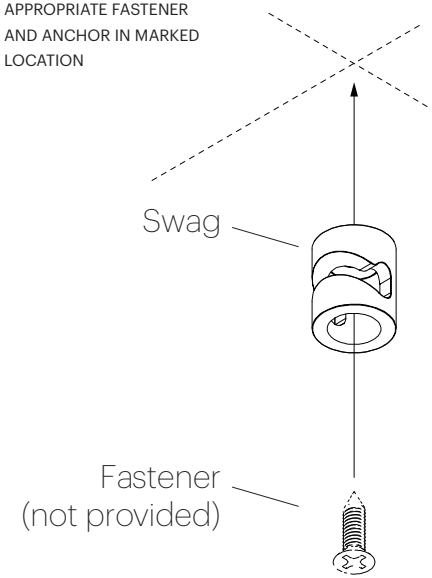

NOTE: Cable slot should face canopy center point.

Cable slot

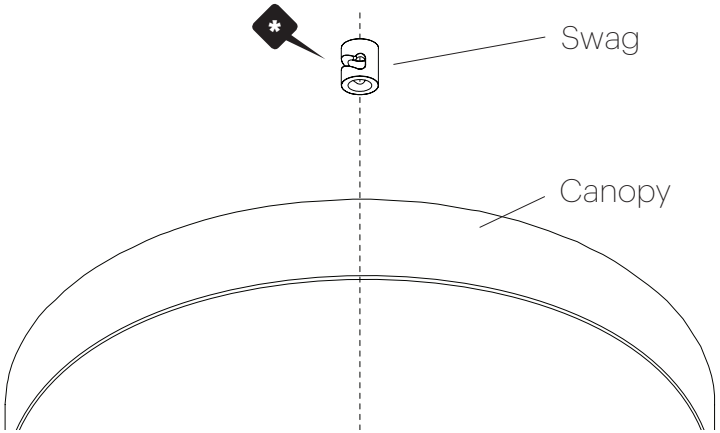

BOLA

* BOLA: ASSEMBLE DISC AND LIGHT ENGINE

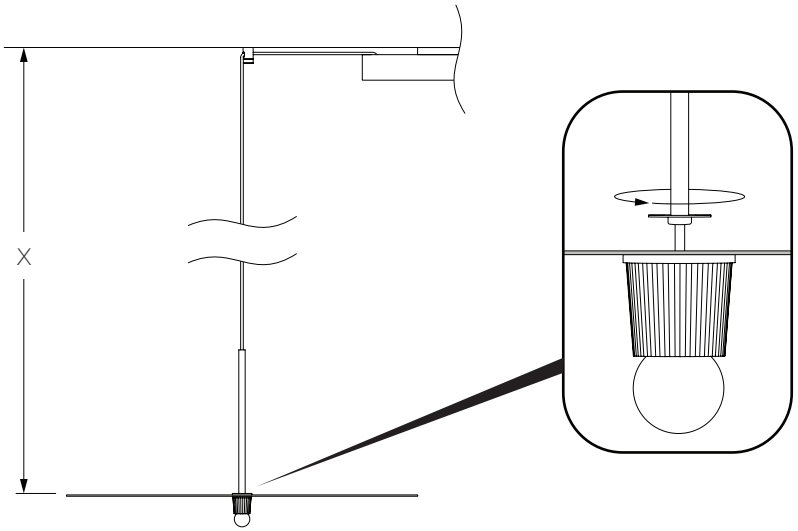

USE PROVIDED GLOVES WHEN HANDLING LAMP TO AVOID FINGER MARKS.

BOLA CIELO XL

10 PLACE WIRE IN SWAG. MAKE SURE WIRE IS IN CHANNEL

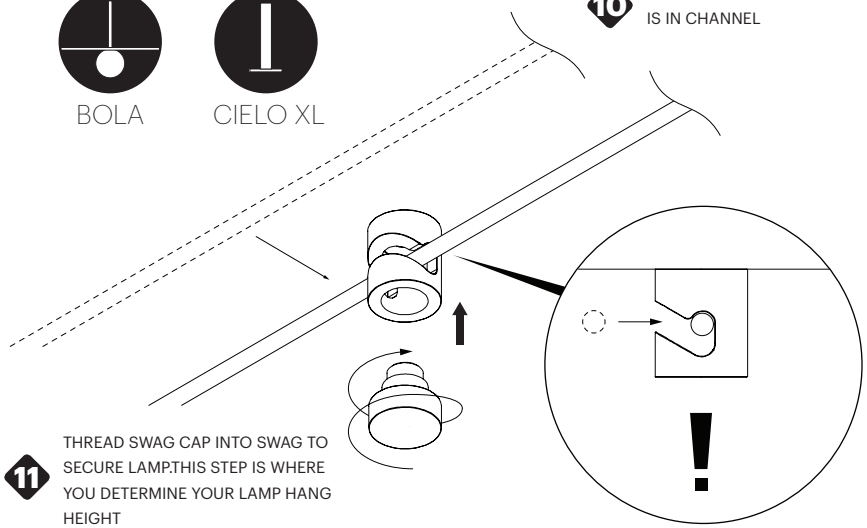

11 THREAD SWAG CAP INTO SWAG TO SECURE LAMP.THIS STEP IS WHERE YOU DETERMINE YOUR LAMP HANG HEIGHT

Pablo®
MULTI-LIGHT CANOPY

12 THREAD WIRE THROUGH MOUNT PLATE

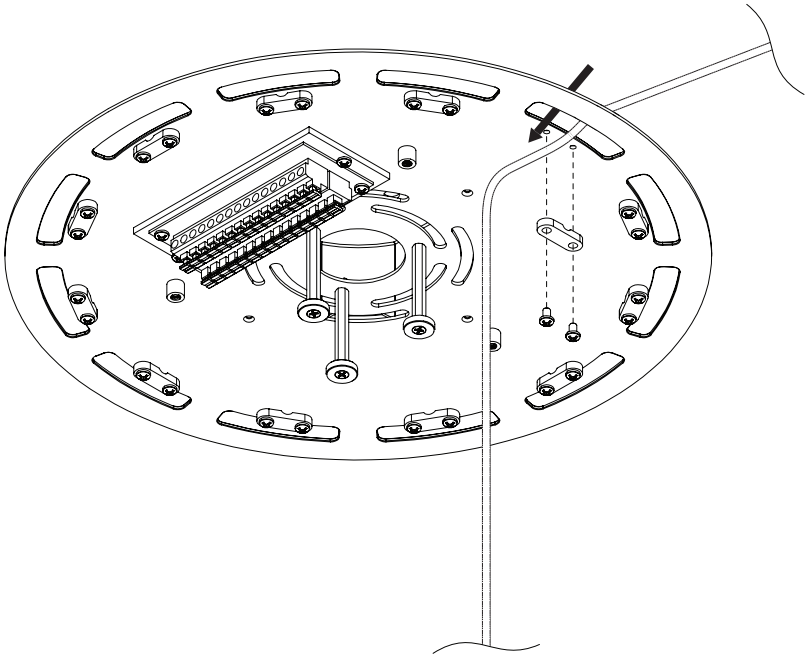

13 PULL WIRE TAUGHT AND STRAIN RELIEVE

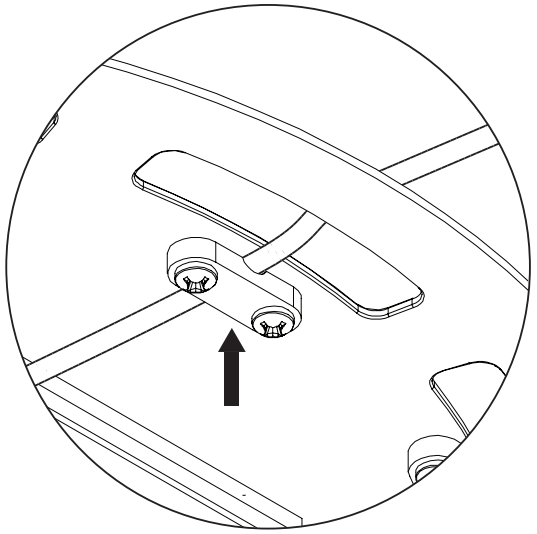

13

A REMOVE PLUG

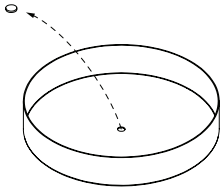

B PLACE CANOPY COVER BAG OVER CANOPY

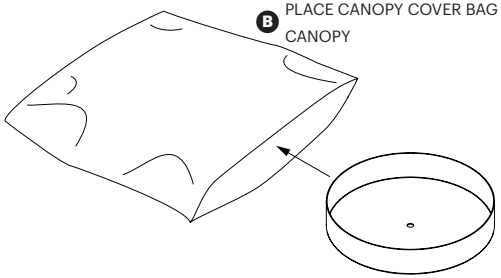

C USING A PENCIL, PUNCTURE SMALL HOLE FOR WIRE TO PASS THROUGH

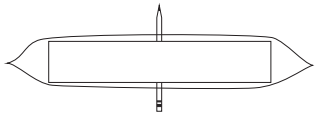

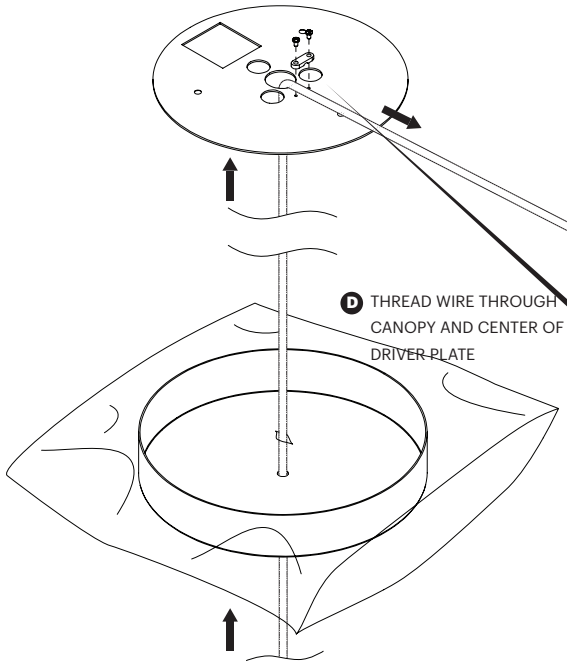

D THREAD WIRE THROUGH CANOPY AND CENTER OF DRIVER PLATE

E

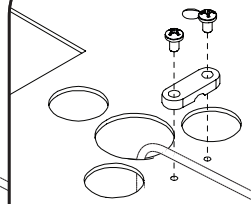

STRAIN RELIEVE WIRE ON DRIVER PLATE
NOTE FOR BOLA: THIS IS WHEN YOU SET YOUR HANG HEIGHT

F TIE KNOT JUST PAST STRAIN RELIEF

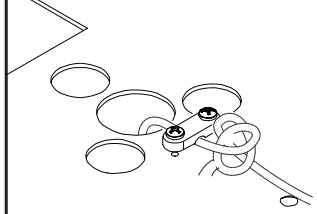

14 ATTACH DRIVER PLATE TO MOUNT PLATE WITH PROVIDED FLAT HEAD SCREWS
THREAD WIRES THROUGH CENTER OF DRIVER PLATE

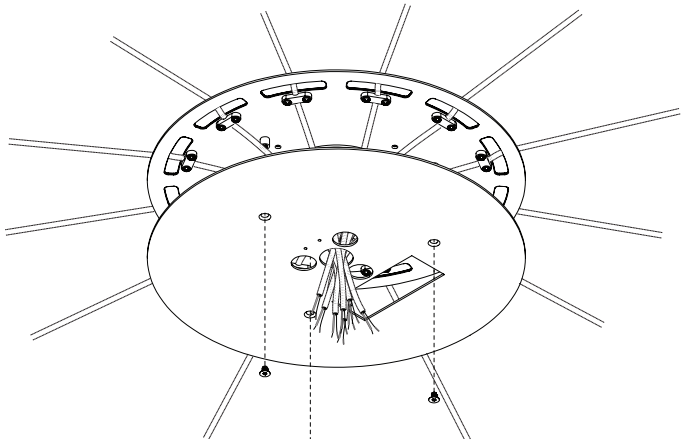

15

BOLA

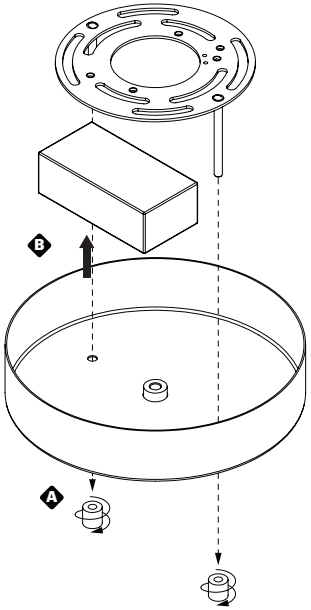

CIELO XL

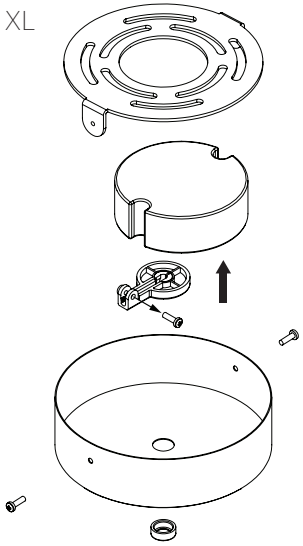

REMOVE INDIVIDUAL LAMP DRIVERS FROM INDIVIDUAL LAMP CANOPIES

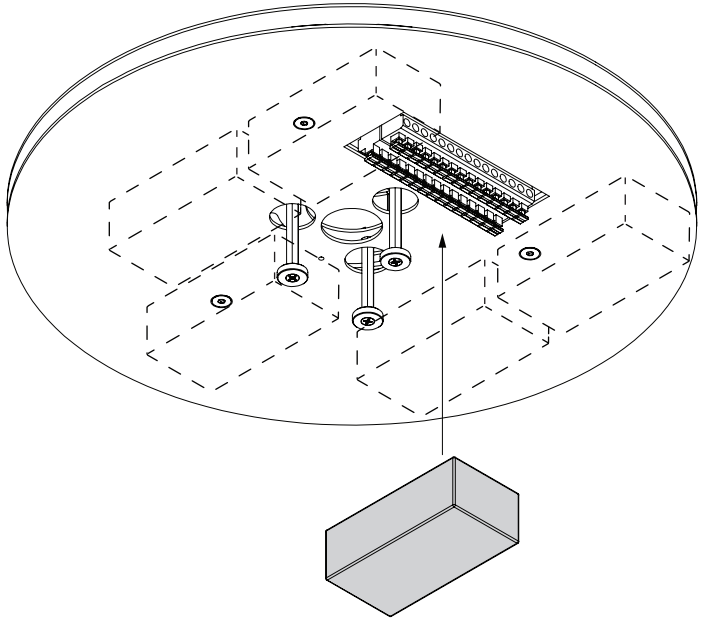

16 PEEL LINER OFF OF VHB TAPE AND ATTACH DRIVERS TO DRIVER PLATE

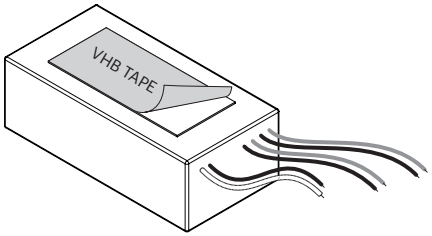

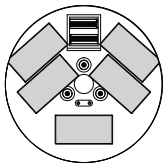

9" CANOPY MAXIMUM CAPACITY

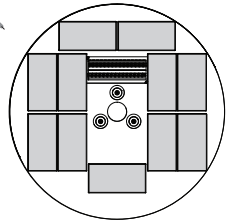

12" CANOPY MAXIMUM CAPACITY

17 CONNECT DRIVERS TO TERMINAL BLOCK.
US: BLACK TO BLACK AND WHITE TO WHITE
EU: BROWN TO BROWN AND BLUE TO BLUE

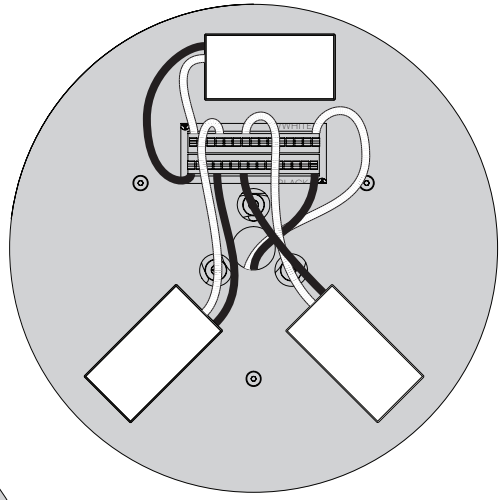

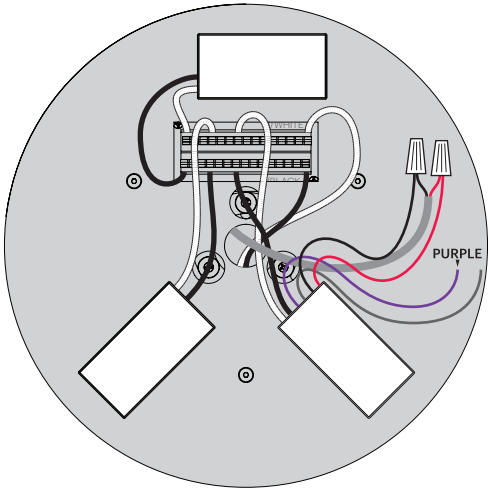

18 ONE AT A TIME, WIRE LAMPS TO MATCHING DRIVERS. CUT EXCESS WIRES IF NECESSARY

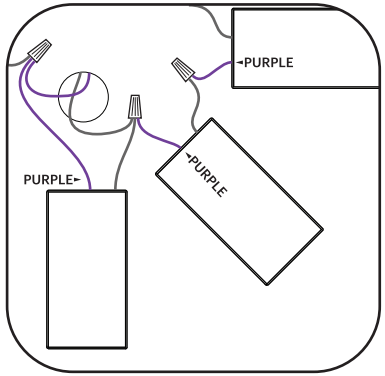

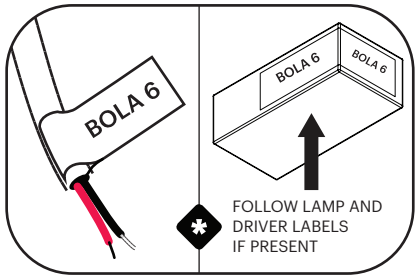

* FOLLOW LAMP AND DRIVER LABELS IF PRESENT

! IF USING 0 - 10V DIMMING WIRE DIMMER IN PARALLEL

19 ATTACH CANOPY COVER

CARE INSTRUCTIONS
WIPE CLEAN WITH A SOFT DAMP CLOTH
AVOID AMMONIA BASED CLEANER.

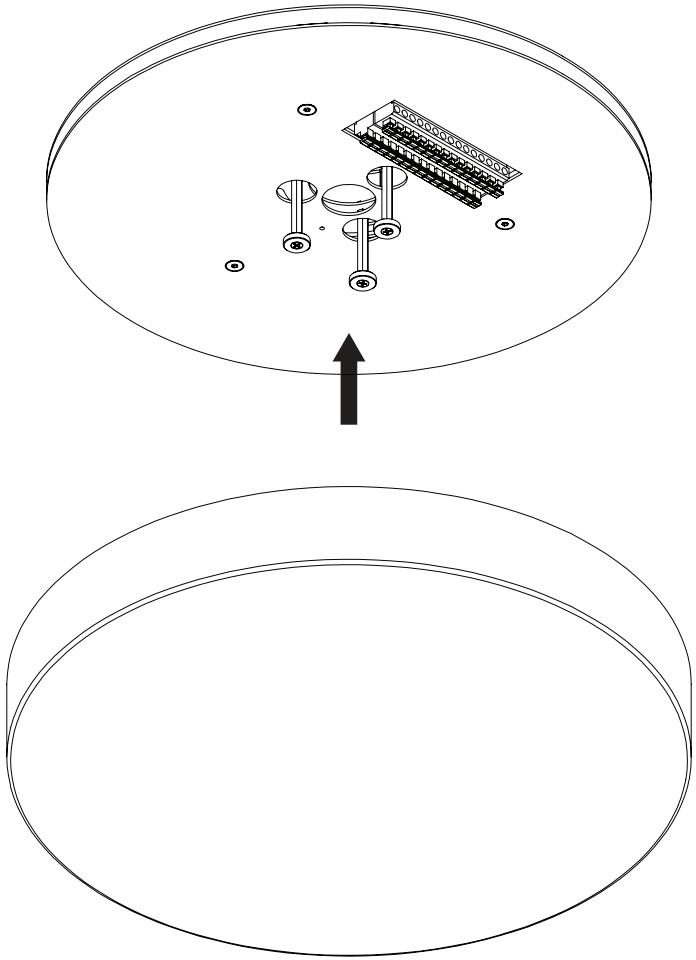

USE PROVIDED GLOVES WHEN HANDLING LAMP TO AVOID FINGER MARKS.

USE PROVIDED GLOVES WHEN HANDLING LAMP TO AVOID FINGER MARKS.

20 THREAD GLOBE ONTO HEAT SINK.
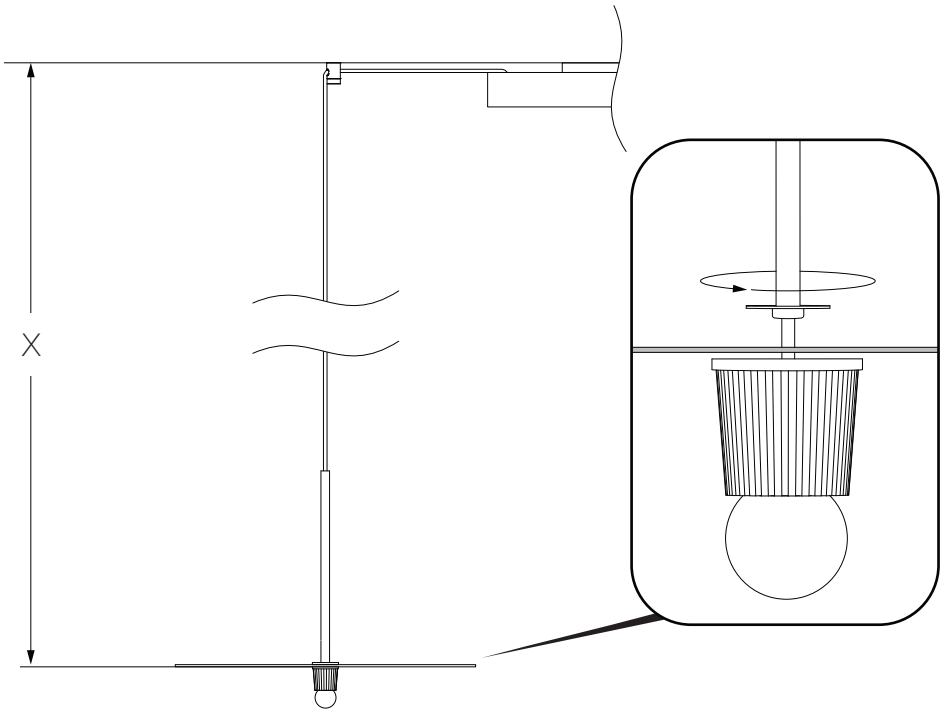
CARE INSTRUCTIONS
WIPE CLEAN WITH A SOFT DAMP CLOTH
AVOID AMMONIA BASED CLEANER.