Pablo®

BOLA DISC FLUSH

ASSEMBLY & INSTALLATION INSTRUCTIONS

Intertek

Pablo®

BOLA DISC FLUSH

BOLA DISC FLUSH MODELS

I. BOLA DISC FLUSH (CEILING MOUNTED)

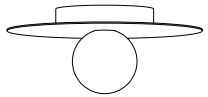

BOLA DISC FLUSH 12
4″ GLOBE

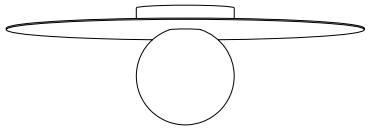

BOLA DISC FLUSH 22
6″ GLOBE

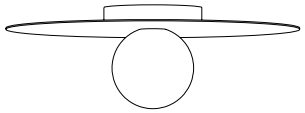

BOLA DISC FLUSH 18
5″ GLOBE

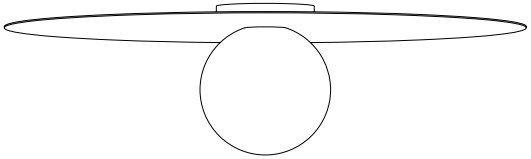

BOLA DISC FLUSH 32
8″ GLOBE

II. BOLA DISC FLUSH (WALL MOUNTED)

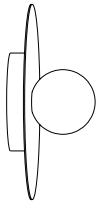

BOLA DISC FLUSH 12
4″ GLOBE

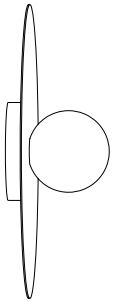

BOLA DISC FLUSH 18
5″ GLOBE

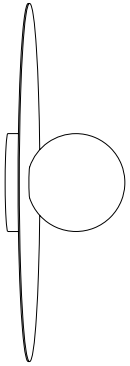

BOLA DISC FLUSH 22
6″ GLOBE

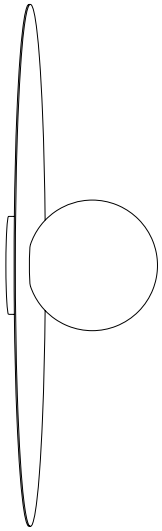

BOLA DISC FLUSH 32
8″ GLOBE

Pablo®

BOLA DISC FLUSH

IMPORTANT: WE RECOMMEND FIXTURE BE INSTALLED BY AN ELECTRICIAN
WARNING: FIXTURE MUST BE WIRED CORRECTLY OR RISK DAMAGE TO COMPONENTS
NOTE: IT IS RECOMMENDED THAT BOLA DISC FLUSH IS INSTALLED BY TWO PEOPLE.

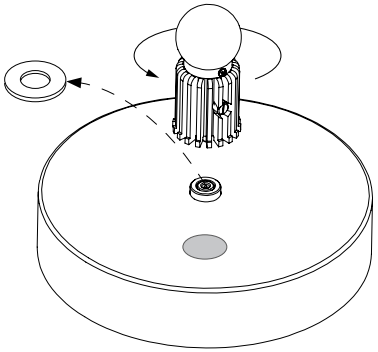

1 UNTHREAD LIGHT ENGINE FROM CANOPY, AND DISCARD FOAM WASHER.

2 ATTACH MOUNTING PLATE TO JUNCTION BOX OR WALL.

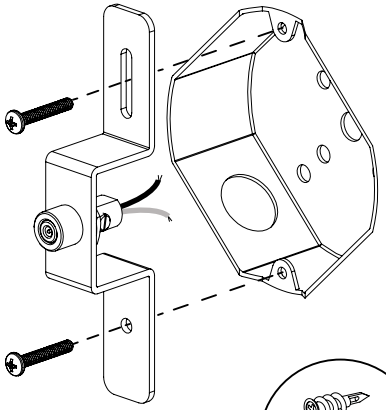

WALL ANCHORS OR TOGGLE BOLTS REQUIRED WHEN JUNCTION BOXES ARE NOT USED. *(NOT PROVIDED)*

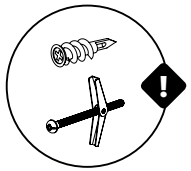

3 WIRE DRIVER TO BUILDING.
(**US:** BLACK TO BLACK AND WHITE TO WHITE)
(**EU:** BLUE (N) TO BLUE AND BROWN (L) TO BROWN)

NOTE: PURPLE AND GREY CORDS ARE USED ONLY WITH 0-10V DIMMER SWITCH.

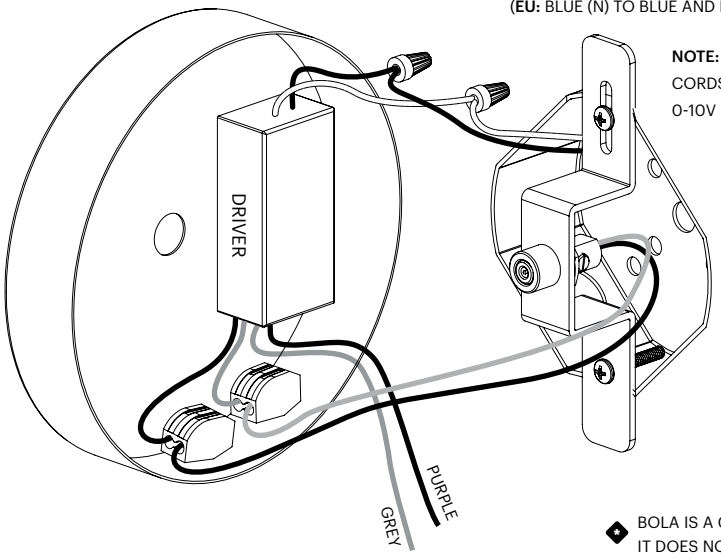

BOLA IS A CLASS II FIXTURE.
IT DOES NOT REQUIRE GROUNDING.

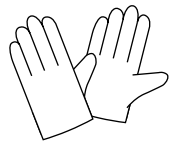

USE PROVIDED GLOVES WHEN HANDLING LAMP TO AVOID FINGER MARKS.

4 PEEL BACKING FROM 3M VHB TAPE ON MOUNTING BRACKET.

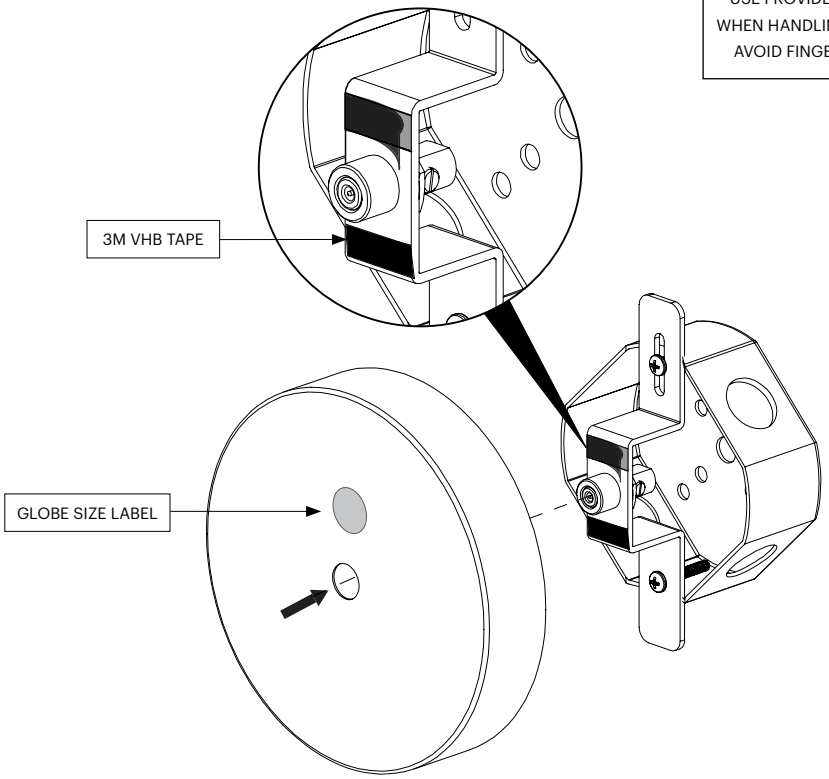

5 SECURE CANOPY COVER TO MOUNTING BRACKET.

! IF INSTALLING MULTIPLE BOLA DISC SIZES, MAKE SURE TO KEEP CORRESPONDING LIGHT ENGINE & CANOPY TOGETHER. **DO NOT MIX DIFFERENT LIGHT ENGINES & CANOPIES WITH EACH OTHER.**

Pablo®
BOLA DISC FLUSH

6 INSTALL DISC OVER THREADED DC CONNECTOR, THEN THREAD LED LIGHT ENGINE ONTO CANOPY FIRMLY TO SECURE DISC.

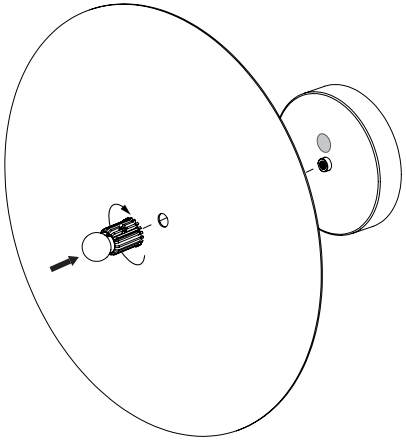

7 CAREFULLY THREAD GLASS GLOBE ONTO LIGHT ENGINE WITHOUT OVER-TIGHTENING.

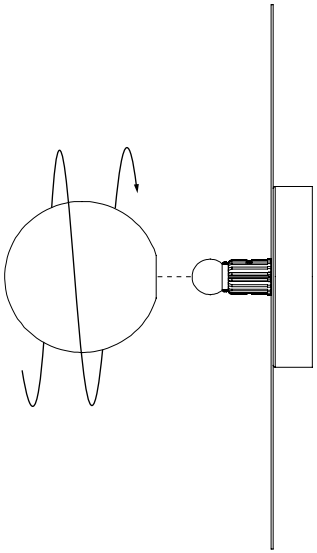

BULB TYPE
LED
FULL RANGE LIGHT CONTROL VIA
120V DIMMER (US)
OR ELV DIMMER (EU)

BULB REPLACEMENT
CONTACT MANUFACTURER FOR BULB REPLACEMENT

CARE INSTRUCTIONS
WIPE CLEAN WITH A SOFT DAMP CLOTH. AVOID AMMONIA-BASED CLEANERS.

Pablo®

BOLA DISC FLUSH

BOLA DISC FLUSH OVERLAPPING CONFIGURATIONS

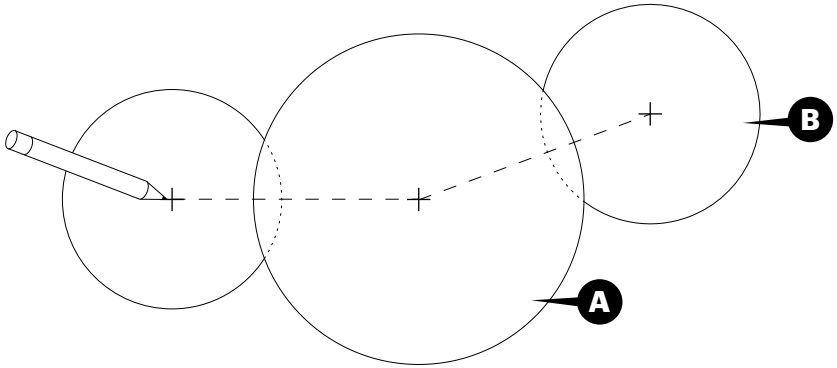

1 MARK THE CENTER OF ALL DISCS ON THE WALL. REFERENCE CHART FOR RECOMMENDED OVERLAP SPACING.
NOTE: MEASURE FROM CENTER TO CENTER.
WE RECOMMEND THE LARGER DISCS ALWAYS BE IN FRONT USING A STANDOFF.

A FRONT DISC B BACK DISC

ADD-ON STANDOFF REQUIRED FOR EVERY OTHER OVERLAPPING DISC.

SPACING CHART FOR OVERLAPPING CONFIGURATIONS.

DISC SPACING CENTER TO CENTER		A FRONT DISC			
		BOLA DISC FLUSH 12	BOLA DISC FLUSH 18	BOLA DISC FLUSH 22	BOLA DISC FLUSH 32
B BACK DISC	BOLA DISC FLUSH 12	10.5″ 26.7 CM	13.5″ 34.3 CM	15.5″ 39.4 CM	20.5″ 52 CM
	BOLA DISC FLUSH 18	12.75″ 32.4 CM	15.75″ 40 CM	17.75″ 45 CM	22.75″ 57.8 CM
	BOLA DISC FLUSH 22	14.25″ 36.2 CM	17.25″ 43.8 CM	19.25″ 48.9 CM	24.25″ 61.5 CM
	BOLA DISC FLUSH 32	18″ 45.7 CM	21″ 53.3 CM	23″ 58.4 CM	28″ 71.1 CM

Pablo®

BOLA DISC FLUSH

BOLA DISC FLUSH CONFIGURATION SETUP

ONE JUNCTION BOX FEEDS ALL LIGHTS (UP TO CAPACITY OF YOUR JUNCTION BOX).

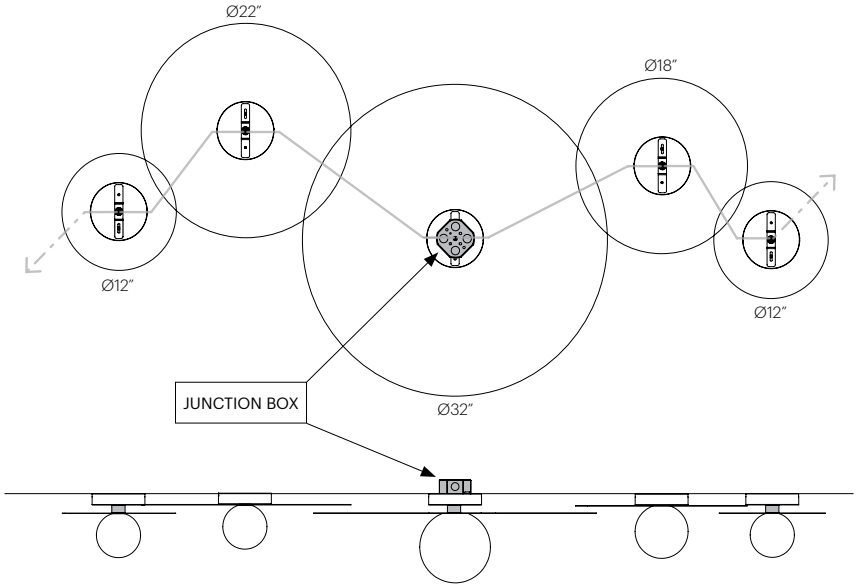

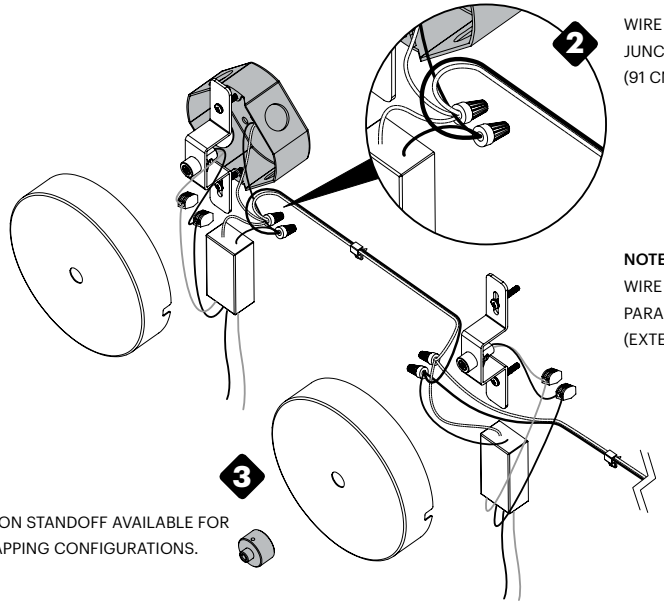

WIRE DRIVERS IN PARALLEL TO MAIN JUNCTION BOX VIA SUPPLIED 36″ (91 CM) POWER CABLE.

NOTE: IF USING 0-10V DIMMING, WIRE PURPLE & GREY CORDS IN PARALLEL NEXT TO POWER CABLE. (EXTENSION NOT PROVIDED)

1″ ADD-ON STANDOFF AVAILABLE FOR OVERLAPPING CONFIGURATIONS.

NOTE: REFER TO PREVIOUS PAGE FOR RECOMMENDED OVERLAP SPACING.

Pablo®

BOLA DISC FLUSH

BOLA DISC FLUSH CONFIGURATION SETUP

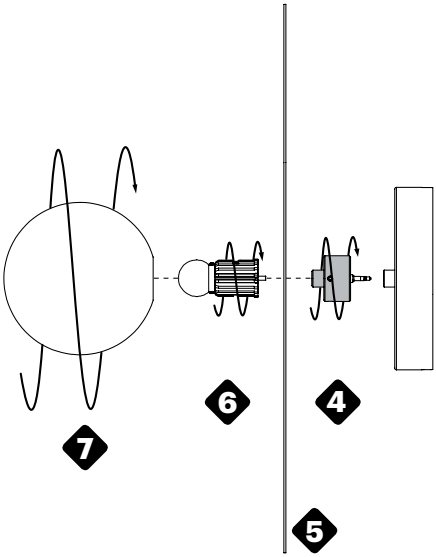

4. THREAD THE ADD-ON STANDOFF ONTO THE CANOPY OF THE DISC THAT YOU WANT IN FRONT.
5. INSTALL DISC OVER STANDOFF.
6. THREAD LIGHT ENGINE ONTO CANOPY FIRMLY TO SECURE DISC.
7. CAREFULLY THREAD GLASS GLOBE ONTO LIGHT ENGINE.

CARE INSTRUCTIONS

WIPE CLEAN WITH A SOFT DAMP CLOTH. AVOID AMMONIA-BASED CLEANERS.